Router Bit Bargains: Save Money — Great Results

Woodsmith®

www.woodsmith.com

Vol. 27 / No. 160

easy-to-build Platform Bed completes our 5-piece suite

shop solutions

- **Workbenches**
  PERFECT PLACEMENT
- **Table Saw Sleds**
  CLEAN, PRECISE CUTS

PLUS: 15 Top Assembly Tips

A Publication of August Home Publishing

Table of Contents

departments

from our readers
Tips & Techniques 4

all about
Bargain Router Bits 8
Are low-cost router bit sets worth the money? You'll be surprised at what we found out.

tools of the trade
Miter Saw Blades 10
Getting the best results with a miter saw starts with choosing and using the right blade.

techniques from our shop
15 Tips & Tricks for Assembly 12
Learn the tips and tricks for gluing up a drawer.

jigs and fixtures
Table Saw Miter Sleds 14
Take your table saw to the next level by adding a precision miter sled.

tips from our shop
Shop Notebook 30

working with tools
Countersink Bits 40
Not all countersink bits are the same. Here's what you need to know before you buy one.

small shop solutions
Workbench Location 42
Where you put your workbench is the key to getting the most out of your shop.

finishing room
Getting a High-Gloss Finish 44
A classic, high-gloss finish is easier than you may think. We'll show you how.

in the mailbox
Q & A 48

hardware and supplies
Sources 49

DVD Storage Cases page 16

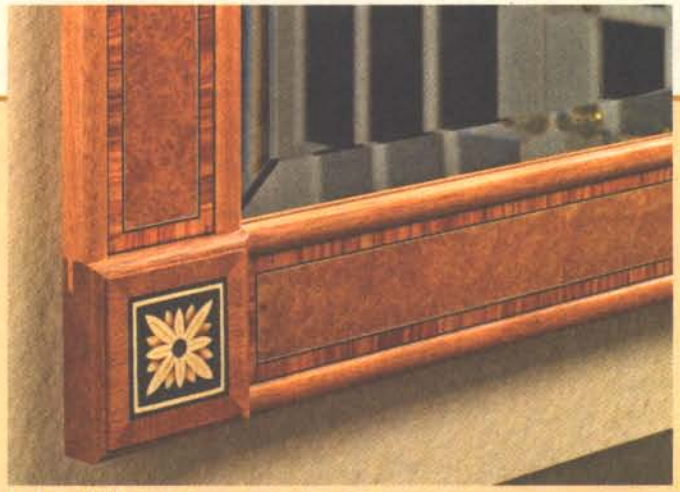

Inlay Mirror Frame page 32

features

weekend project

DVD Storage Case 16

Organize your growing collection of DVDs with one (or more) of these versatile storage cases.

designer series project

Platform Bed 22

You won't lose sleep building this bed. Built with simple joinery, it yields rock-solid results.

DESIGNER'S NOTEBOOK

heirloom project

Inlay Mirror Frame 32

Show off your skills with this mirror frame that features stylish inlays and miter-free corners.

DESIGNER'S NOTEBOOK

details of craftsmanship

Coped Joints 50

Installing molding with a good fit is a challenge. Learn how to cut a tight-fitting coped joint.

ONLINE EXTRA
video workshop

Woodsmith GO ONLINE EXTRAS

These two symbols let you know there's more information online at www.Woodsmith.com. There you'll see step-by-step videos, technique and project animation, bonus cutting diagrams, and a lot more.

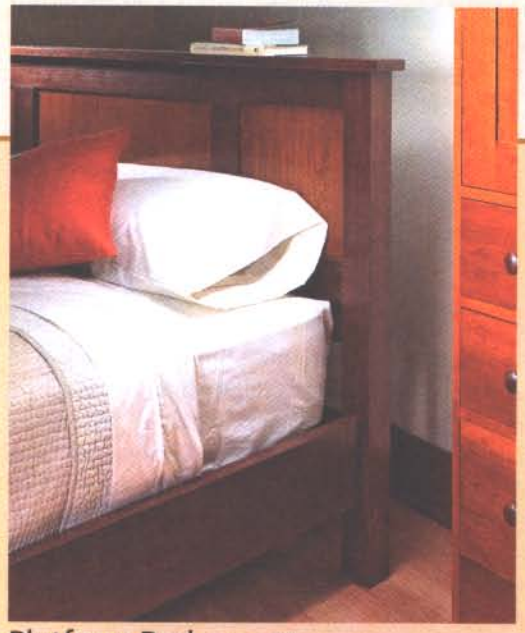

Platform Bed page 22

editor's note

Sawdust

A few years back (October of 2002 to be exact) we featured a cherry armoire in *Woodsmith*. The idea back then was to take a large project and make it as easy to build as possible. So we streamlined the construction by using plywood panels and straightforward joinery. Plus, we updated the traditional armoire by setting it on an open base and using contrasting stains to give it a two-tone look.

The project turned out so well it was quickly followed by a matching nine-drawer dresser, a mirror, and a night stand. Only one piece was missing. Which, of course, brings me to the designer series project in this issue — a matching bed.

The bed features a platform-style design, which means you don't need to spend money on a box spring. But more importantly, it gives the bed an updated, contemporary look. Now, we built ours out of cherry and stained it to match the other pieces in the set. But this project would look great built out of just about any wood. Note: If you would like to build the other pieces in the suite, plans are still available at www.Woodsmith.com.

NEW FACE. Designing projects like the platform bed is the responsibility of our design group — they're the key to the great woodworking projects we feature in every issue of *Woodsmith*. To give us a hand in this area, John Doyle recently joined our staff as a project designer and builder. John brings a lot of experience to the group, and I'm looking forward to working with him.

Terry

FREE TIPS BY EMAIL

Now, you can have the best, time-saving secrets, solutions, and techniques sent directly to your computer. Just go to www.Woodsmith.com and click on "FREE Tips by Email" to sign up. You'll receive a new tip by e-mail each week.

Tips & Techniques

▲ For smaller drawers, you can use a pair of coupling nuts. Several different lengths of threaded rod will make it easy to square any size drawer.

Squaring Drawers

Assembling square drawers has always been a challenge for me. I've never had much luck trying to clamp across the long outside corners to square up the drawer.

What I came up with is the "squaring rods" you see in the photos above. Basically, these rods apply pressure across the "short" diagonal to push the drawer square from the inside. I use turnbuckles and threaded rods for larger drawers. The round eyebolts wedge into the corners as I tighten the rod and won't twist or mar the wood.

For smaller drawers, I use the rod configuration you see in the inset photo. The ends of the smaller rods are epoxied ½" into the coupling nuts to prevent them from loosening while I'm twisting the coupling nuts. The rubber caps protect the wood from the threads on the end of the rod.

I keep several different lengths of threaded rod on hand for different size drawers. With these two types of "squaring rods," I can now assemble perfectly square drawers every time I build them.

Bryan Rogers
St. Petersburg, Florida

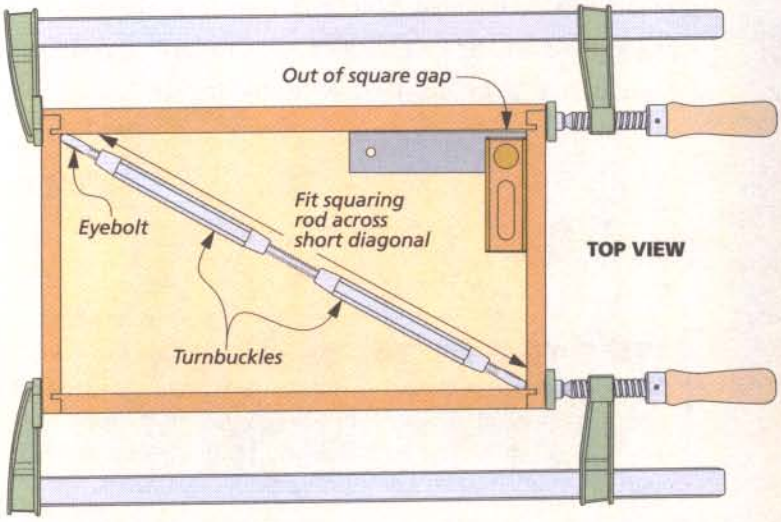

SUBMIT YOUR TIPS

If you have an original shop tip, we would like to hear from you and consider publishing your tip in one or more of our publications. Just write down your tip and mail it to: Woodsmith, Tips and Techniques, 2200 Grand Avenue, Des Moines, Iowa 50312. Please include your name, address, and daytime phone number in case we have any questions. If you would like, FAX it to us at 515-282-6741 or send us an email message at: woodsmith@woodsmith.com. We will pay up to $200 if we publish your tip.

Adjustable Curve

Every now and then, I'm faced with laying out a smooth curve. My solution is the jig shown in the drawing on the right. I made the base out of hard maple because of its strength and resistance to warping. Then I drilled a hole through the center of the base and installed a threaded insert. This insert will hold a length of threaded rod that will be used to adjust the degree of bow (see detail 'a' below).

Next, I cut a holddown assembly consisting of a cap, a foot, and a dowel for each end of the bow (see Exploded View at right). These should fit snug enough to maintain control of the bow while you're working with it, yet allow the bow to flex to whatever size arc you need. The caps are screwed to the base, so you can remove them if you need to replace the bow. The feet are glued into place.

Next, I cut a bow to overhang each end of the base by about 4½", with dowels holding the bow in place. In the center of the bow, I drilled a shallow hole for the bolt to fit into to help keep the bow steady. I then placed a small washer into the hole to prevent the bolt from damaging the hole. Adjusting the bow to the desired curve is simply a matter of tightening or loosing the stove bolt.

Jim Buske
Rockton, Illinois

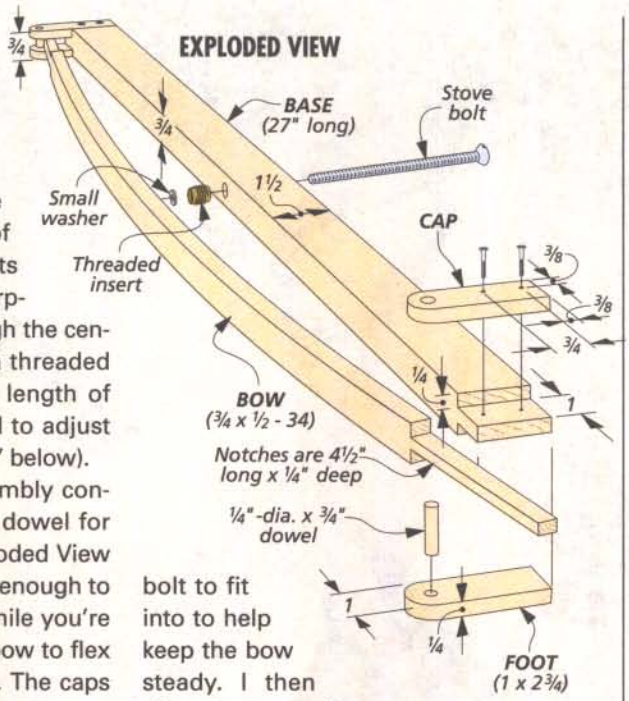

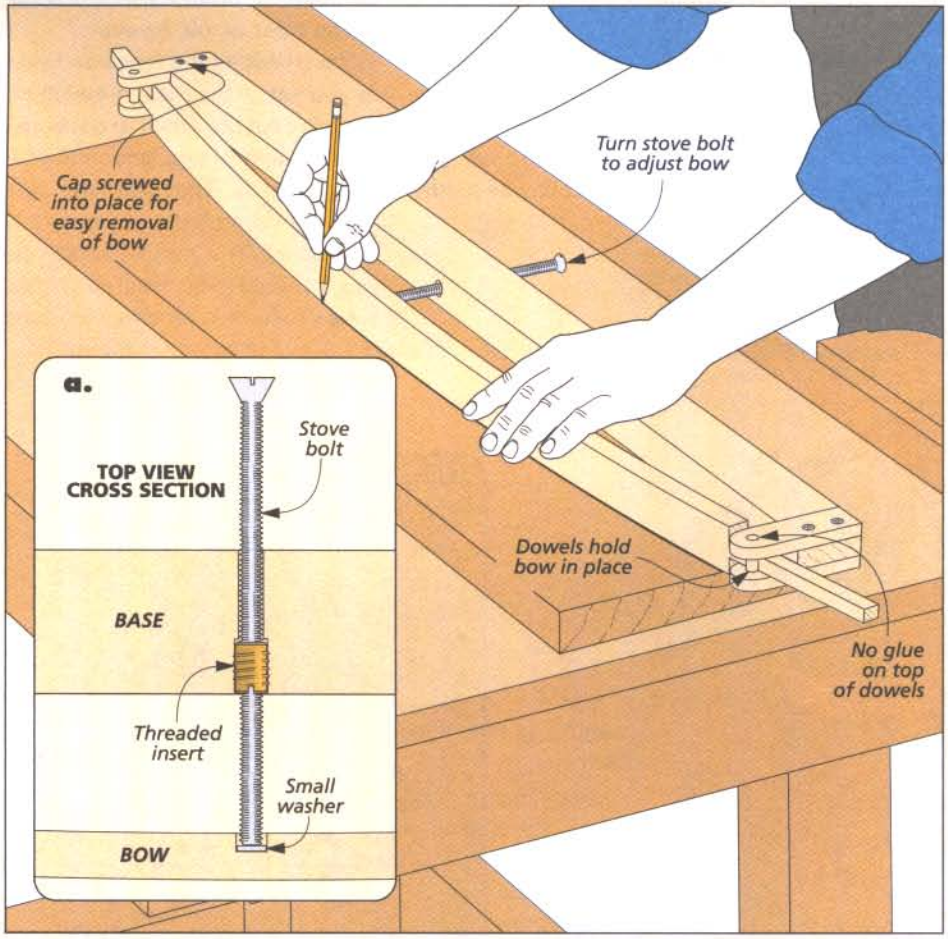

Woodsmith

No. 160 August/September 2005

PUBLISHER Donald B. Peschke

EDITOR Terry J. Strohman

SENIOR EDITORS Vincent Ancona, Bryan Nelson
ASSOCIATE EDITORS Phil Huber, Ted Raife
ASSISTANT EDITORS Ron Johnson, Mitch Holmes

EXECUTIVE ART DIRECTOR Todd Lambirth
SENIOR ILLUSTRATORS David Kreyling, Dirk Ver Steeg, Harlan V. Clark
ILLUSTRATORS David Kallemyn, Peter J. Larson
GRAPHIC INTERN Becky Hansen

CREATIVE DIRECTOR Ted Kralicek

SENIOR PROJECT DESIGNERS Ken Munkel, Kent Welsh, Chris Fitch
PROJECT DESIGNERS/BUILDERS Mike Donovan, John Doyle
SHOP CRAFTSMEN Steve Curtis, Steve Johnson
SR. PHOTOGRAPHERS Crayola England, Dennis Kennedy
ASSOCIATE STYLE DIRECTOR Rebecca Cunningham
ELECTRONIC IMAGE SPECIALIST Allan Ruhnke
VIDEOGRAPHERS Craig Ruegsegger, Mark Hayes

Woodsmith® (ISSN 0164-4114) is published bimonthly (Feb., Apr., June, Aug., Oct., Dec.) by August Home Publishing Company, 2200 Grand Ave, Des Moines, IA 50312.

Woodsmith® is a registered trademark of August Home Publishing.
Copyright© 2005 August Home Publishing Company. All rights reserved.

Subscriptions: Single copy: $4.95. One year subscription (6 issues), $24.95. (Canada/International add $10 per year, U.S. funds.)
Canadian Subscriptions: Canada Post Agreement No. 40038201. Send change of address information to PO Box 881, Station Main, Markham, ON L3P 8M6. Canada BN 84597 5473 RT
Periodicals Postage Paid at Des Moines, IA and at additional offices. USPS/Perry-Judd's Heartland Division Automatable Poly.
Postmaster: Send change of address to *Woodsmith*, Box 37112, Boone, IA 50037-2112.
Subscription Questions? Write to *Woodsmith*, P.O. Box 842, Des Moines, IA 50304 or call 1-800-333-5075, 8:00 am to 5:00 pm, Central Time, weekdays. Or send an email to: orders@woodsmith.com
Email: woodsmith@woodsmith.com
World Wide Web: http://www.Woodsmith.com

www.Woodsmith.com

ONLINE SUBSCRIBER SERVICES

- **ACCESS** your account
- **CHECK** on a subscription payment
- **TELL US** if you've missed an issue
- **CHANGE** your mailing or e-mail address
- **RENEW** your subscription
- **PAY** your bill

Click on "Subscriber Services" in the list on the left side of our home page. Menus and forms will take you through any of the account-maintenance services you need.

HOW TO REACH US:

FOR SUBSCRIPTIONS, ADDRESS CHANGES OR QUESTIONS, WRITE OR CALL:
Customer Service
2200 Grand Ave., Des Moines, IA 50312
800-333-5075 8 a.m. to 5 p.m. CT

OR VISIT OUR WEB SITE:
www.Woodsmith.com

AUGUST HOME PUBLISHING COMPANY

Printed in U.S.A.

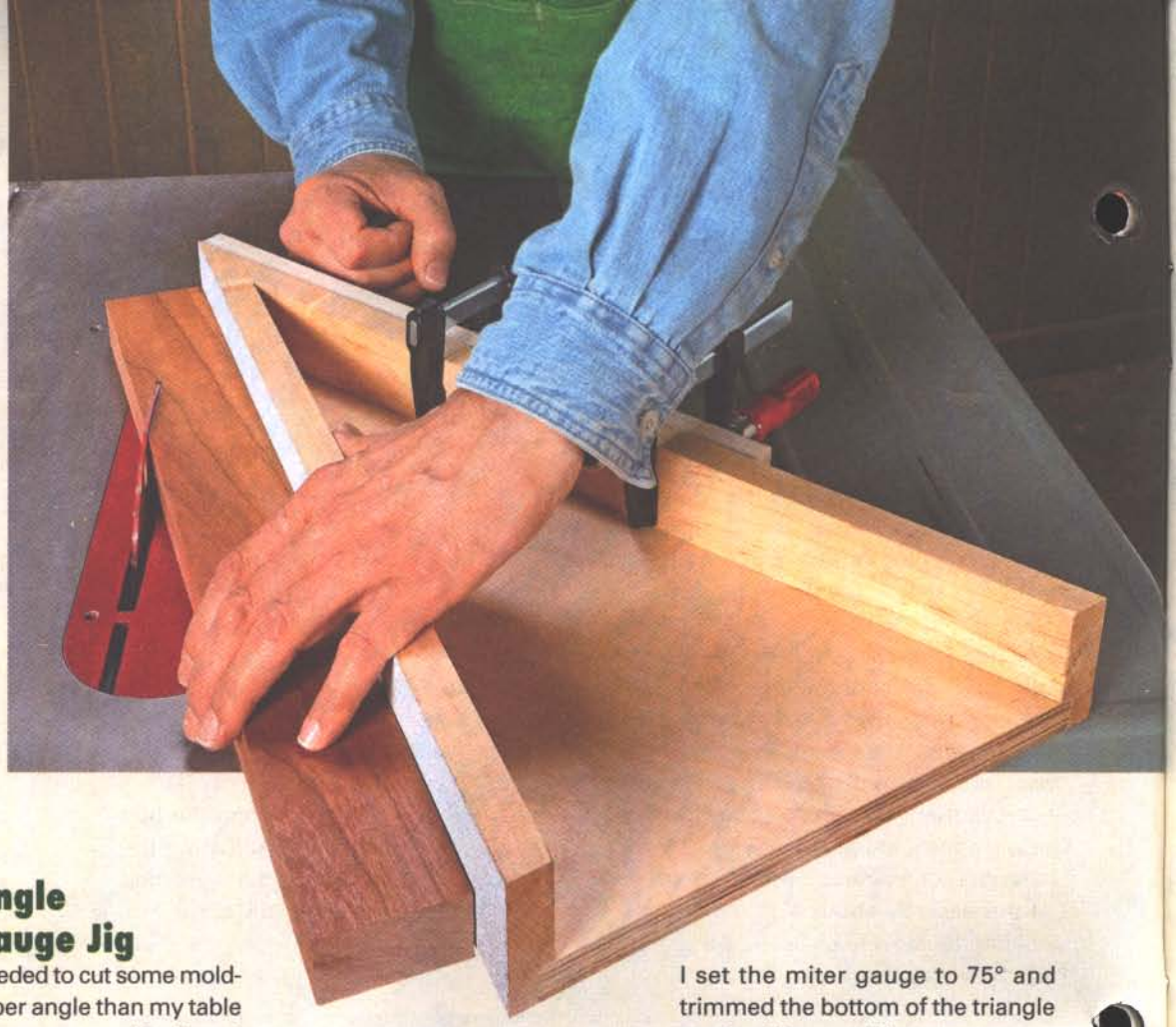

Steep Angle Miter Gauge Jig

Recently I needed to cut some molding at a steeper angle than my table saw's miter gauge would allow. I solved this by making the simple jig you see pictured above.

To make this jig, I first turned my miter gauge clockwise as far as it would go (mine stopped at 30°). Then I set a rectangular piece of plywood against the miter gauge and ripped it to the bottom corner, resulting in a triangular base (see detail 'a'). After that cut was made, I set the miter gauge to 75° and trimmed the bottom of the triangle so the sides would be even.

Next, I added the fence and side as you see in the main drawing on the left. I cut the fence to cover the entire length of one side of the triangular base. That way, the side closest to the blade will stay fully supported. The miter gauge side was trimmed to fit. Finally, I applied adhesive-backed sandpaper to keep my workpieces from slipping.

Ted Ralston
Des Moines, Iowa

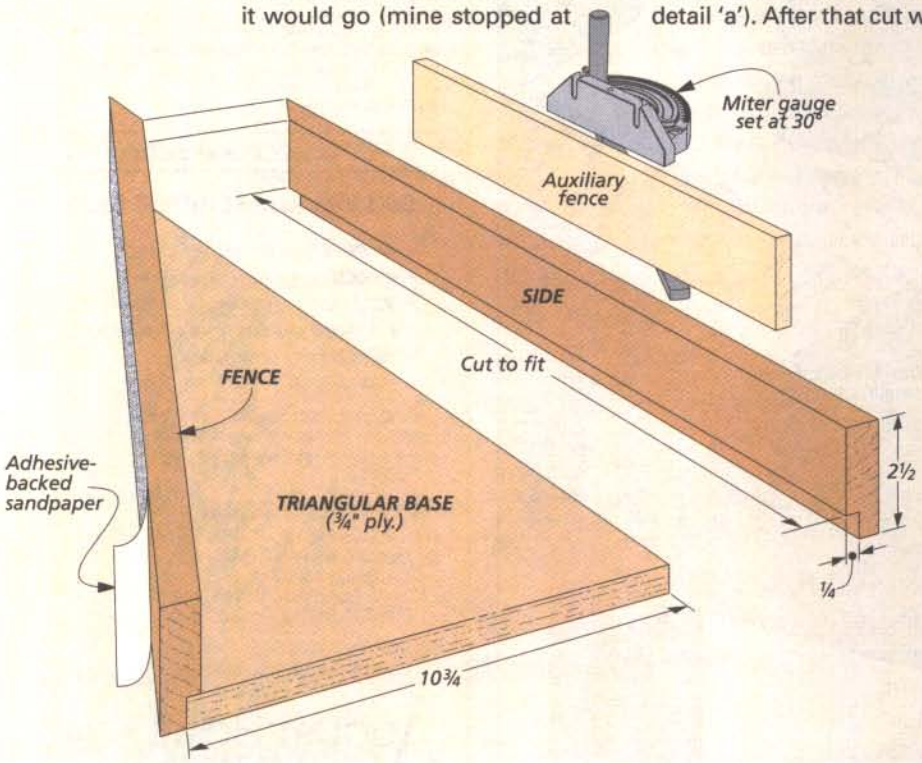

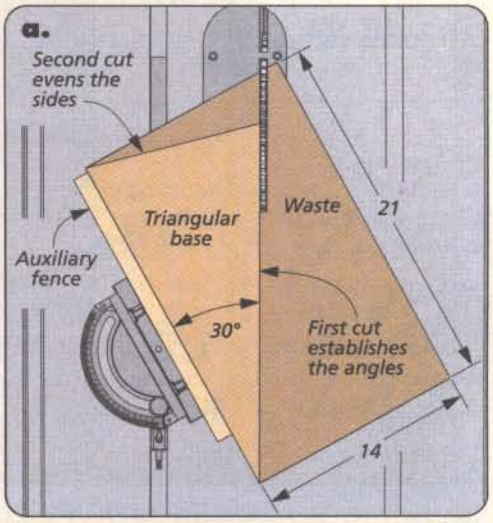

Pipe Clamp Stand

As most woodworkers know, working with pipe clamps can cause some frustration. They don't offer much clearance for the handles, and they easily tip over if you're not careful. So I built my own clamp stands to solve these problems (see photo at right).

What makes these stands so handy is that they're wider than most clamp stands I've seen. The wider stance makes them less likely to roll over. Another benefit is that by using U-bolts, the stands can be attached and removed easily without having to take the clamp apart.

Made from a 2x4, the raised center of the stand supports the pipe without interfering with the clamp head. It also allows me to tighten the pipe to the stand, stabilizing everything while I work with the clamps. I simply rabbeted the sides to raise the center.

These solid stands make using my pipe clamps much easier.

John Ewert
Sequim, Washington

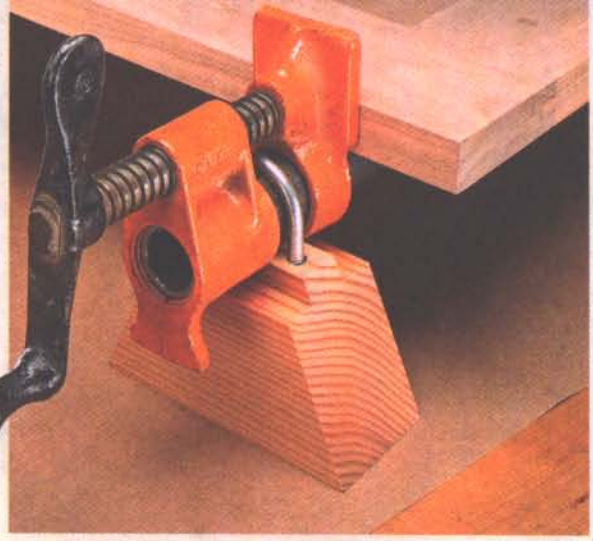

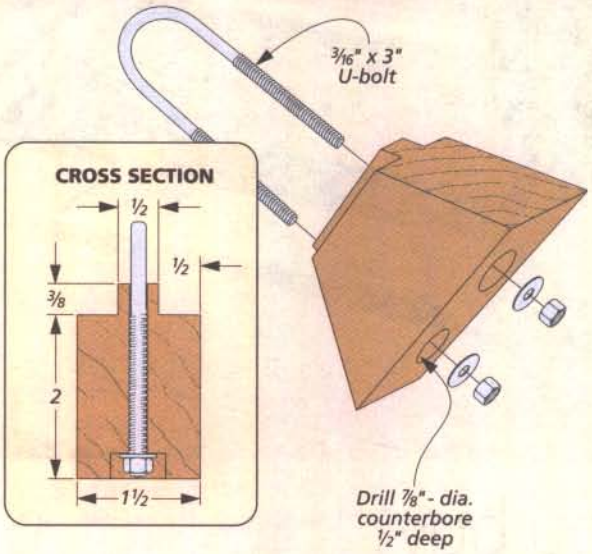

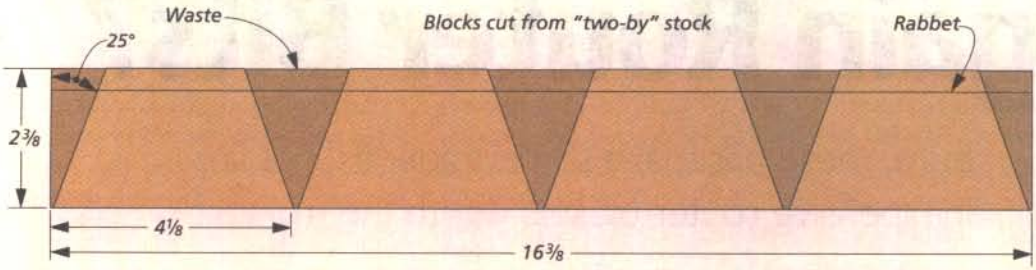

Quick Tips

PLASTIC GLUE PROTECTORS

I used to have a problem with glue sticking to clamp pads or backer boards getting stuck to a joint. I fixed that by using the clear plastic strips found in new shirt collars. I cut them into strips and put them between the project and the clamps. The strips can be used several times before discarding.

Jim Buske
Rockton, Illinois

NEW USE FOR BINDERS

I use three-ring binders as hangers in my shop. I drill out the rivets that hold the worn-out notebook covers on and replace them with wood screws to mount the snap rings horizontally on the wall.

Now, I have a handy way to hang box-end wrenches or tools with holes in the handles. I can even punch holes in plans and hang them from the wall. And when the rings are snapped shut, everything stays put.

Curtis Brainard
Glendora, California

SPONGE SPREADERS

Worn-out sanding sponges make great glue or stain spreaders. I cut them to the size and shape for the job I have. And when I'm finished, there's no cleanup. I just let them dry out and throw them away.

Mel Cochran
San Antonio, Texas

WIN THIS PORTER-CABLE VARIABLE SPEED ROUTER

That's right, send us your shop tips. If your tip or technique is selected as the featured reader's tip, you'll win a Porter-Cable variable speed router just like the one shown here. Send your tips and techniques to: *Woodsmith,* Tips and Techniques, 2200 Grand Avenue, Des Moines, Iowa 50312. Or send us an email message at: woodsmith@woodsmith.com.

The Winner!

Congratulations to John Ewert of Sequim, Washington. His pipe clamp stand design was selected as the winner of the Porter-Cable router. His stands raise clamps for better handle clearance as well as provide more stability.

To find out how you could win a Porter-Cable variable speed router, check out the information on the left.

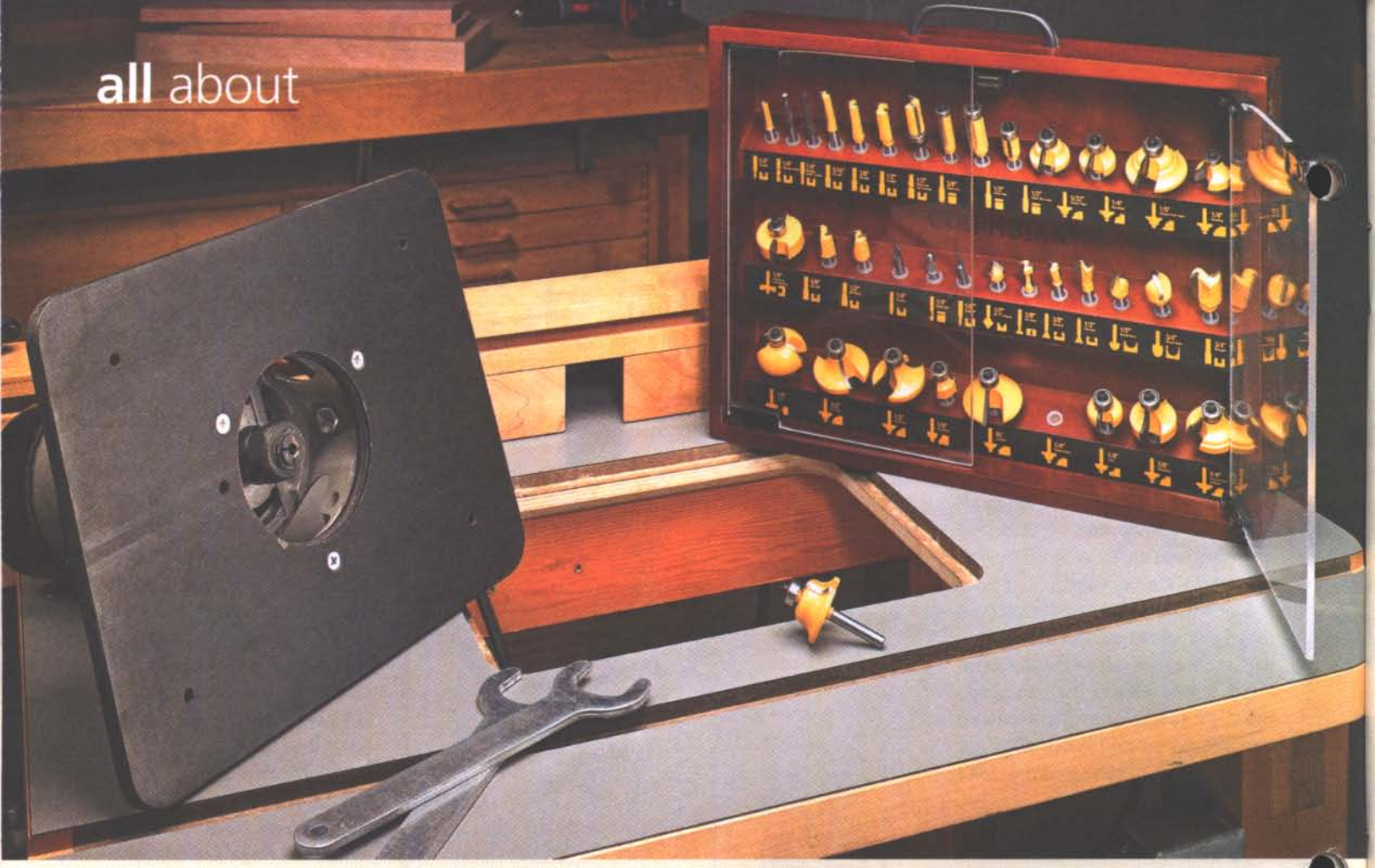

should you buy Bargain Router Bits?

Sure, these bits make some tradeoffs, but are inexpensive router bit sets worth the money?

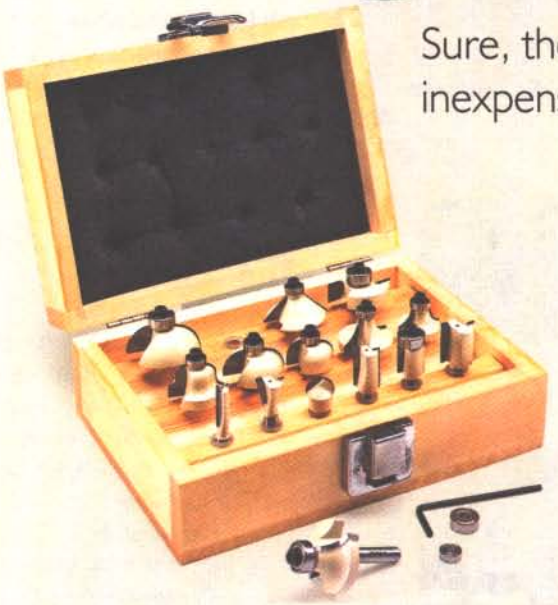

▲ Inexpensive router bit sets let you check out a wide range of profiles without spending a lot of money.

Thirty-six router bits for $50 — how can that be? Flipping through just about any woodworking catalog you're sure to see inexpensive router bit sets (photo above and at left) that seem too good to be true. What makes these deals more amazing are finding similar bits just a few pages later that cost nearly $50 a piece .

Looking at the pictures in the catalog, the bits look nearly identical. So what's the difference between bargain router bits and higher-priced models? To answer that question, you'll need to consider how the bits are manufactured.

CHARACTERISTICS OF BITS

In a nutshell, the main difference between these "bargain" bits and more expensive bits comes down to durability. High-performance bits like *Amana*, *CMT*, and *Freud* are designed for industrial and commercial users. These high-end bits need to stay sharp day after day of hard use.

On the other hand, economy bits are made for a different purpose. These bits are designed for occasional use. In order to make these bits affordable, manufacturers have to find a balance of precision and materials that yields quality results for wood-

workers. Some of these things are easy to see while others aren't very visible.

VISIBLE DIFFERENCES. Several differences between high-quality and bargain bits that are visible can be picked out in the photo at right.

One of the first things you'll notice is the carbide cutting edges. The carbide on the bargain bit (right) is thinner than the more expensive bit. Another thing to look at is the angle on the cutting edge. On bargain bits it's vertical. This means the bit has a chopping effect as it cuts.

By contrast, the high-end bits use a sheer angle that's more expensive to produce. This change of angle results in a slicing cut that's much smoother.

COATINGS. Another difference you'll notice between the two bits shown here is their coatings. The red bit on the left has a *Teflon*-like coating bonded to the body. It prevents pitch buildup and reduces friction while cutting. On the other hand, the coating on the cheaper bit is nothing more than paint that quickly chips off.

INVISIBLE DIFFERENCES. While you can see some differences, it's what you can't see that make the biggest impact on quality and cost. One way to reduce the cost of a bit is in the choice of materials. The steel used in the shank and body of lower-quality bits comes from less expensive alloys than those found in high-quality bits.

In the same way, the cutting edges are made from carbide that's more brittle and with a larger grain size than premium bits. And when low-cost bits are sharpened, the manufacturers often eliminate the final polishing steps after grinding.

While this makes the bit more affordable, the downside is that these inexpensive bits won't cut as efficiently. So, you'll have to watch how fast you feed the router bit into the workpiece. Another drawback is that these bits won't stay sharp as long and can't be resharpened as many times.

BUYING BARGAIN BITS

Knowing how the bits are made leads to a second question: How do these bits cut? After using both type of bits, the results surprised me. Initially, the bargain bits cut smooth and clean. In fact, I couldn't really see any difference between the two bits.

The difference isn't in the first cut, or the second. The more I used the bargain bits, I noticed them cutting rougher as the carbide lost its edge. Eventually this causes tearout, heat buildup, and burning the workpiece.

So does this mean that bargain bit sets aren't a good deal? The answer depends on what you're looking for in router bits and how you use them.

STARTER SETS. I like to think of the inexpensive bit sets as great starter sets. If you're just getting into routing, a set like this will give you a good idea of the types of router bit profiles that are available.

As you use your router bits, you'll find yourself reaching for a few bits pretty often. And these bits will dull quickly. So you can replace them with higher-quality, longer-lasting bits. This way, you're putting your money in the bits you use most.

There will be some bits from the set that you won't use much (or at all). But it's good to know you didn't spend a lot on them.

Several manufacturers are offering "mid-range" bits that are designed for contractors and home woodworkers. You can read more about them in the box below.

Bargain router bits aren't for everyone. But for some people, they can open up new possibilities and add to your woodworking skills. W

Contractor-Grade Bits

Falling somewhere between industrial-quality router bits and the bargain bits talked about above are "contractor-grade" bits. These bits have some of the same qualities as higher-priced bits, like better quality carbide and steel. These bits will last longer and will cut smoother than the less expensive bits.

Several high-end bit manufacturers like *Amana* and *MLCS* have answered the competition from inexpensive bits by launching new lines of bits, like you see in *Amana's Timberline* series shown at left (see sources on page 49).

Even well-known tool makers are getting into the game with their own lines of bits as well. These bits are often found in home improvement centers individually or in sets, like you see in the photo at right. For bits that you use more often, these mid-range bits are a good value.

▲ Contractor-grade bits can come individually or in sets. Built with higher-quality materials and cutting edges, these bits are designed to last longer than bargain bits.

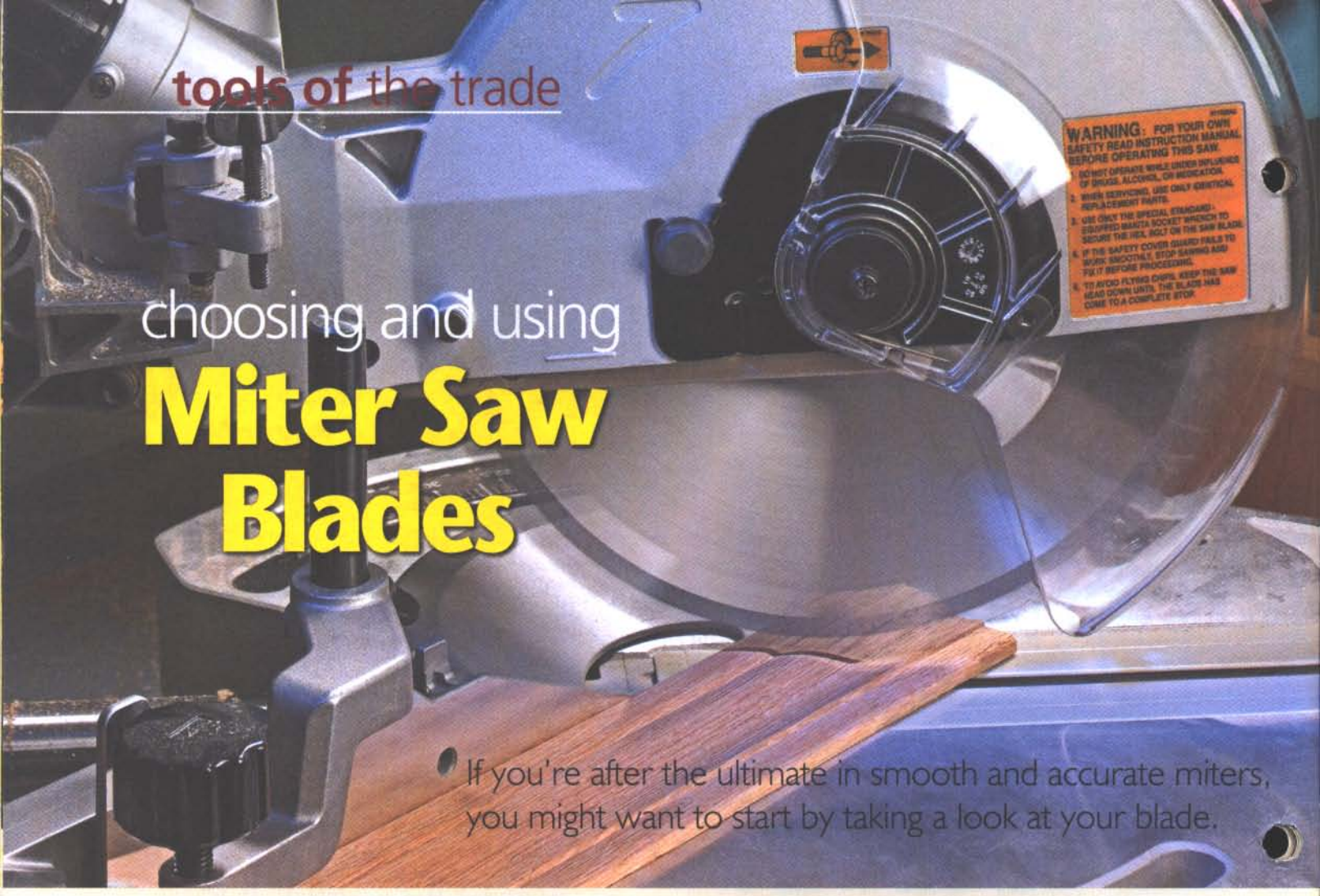

choosing and using Miter Saw Blades

If you're after the ultimate in smooth and accurate miters, you might want to start by taking a look at your blade.

Clean, splinter-free cuts. That's all I ask from my miter saw. And yet, as simple as that sounds, sometimes it seems like an impossible request. But I've learned that the secret to getting great cuts with a miter saw doesn't have as much to do with the saw as it does with the blade.

Nearly every saw blade manufacturer offers at least a couple of blades that have been designed specifically for miter saws. So the question is, "What makes a miter saw blade different than other types of blades?"

WHAT TO LOOK FOR. Essentially, there are three things that a miter saw blade needs to do. First and foremost, it needs to make clean, smooth crosscuts. Second, it shouldn't "grab" the wood as it cuts. And third, it must be able to power through the cut, without bogging down or stalling the motor.

Miter saw blade manufacturers meet these challenges in a number of ways. To begin with, since miter saws are used exclusively for crosscuts and miter cuts, miter saw blades typically have lots of teeth. For a 10"-dia. miter saw blade, 60 teeth are standard, while 12"-dia. blades usually have 80 teeth.

More teeth mean a smoother cut. But there's a downside to having all those teeth. The more teeth on a blade, the more friction is created. And this translates to greater heat buildup. This not only leads to burning on the workpiece, but it can cause the plate of the blade to expand and distort, which can produce a rough cut.

To help combat this, most manufacturers add expansion slots to their blades (see inset photo at left). As their name implies, these slots are designed to allow the outer edge of the blade to expand slightly as friction causes the blade to heat up.

More teeth mean smoother cuts. The 60-tooth, 10" blade and 80-tooth, 12" blade below are typical examples of miter saw blades. ▼

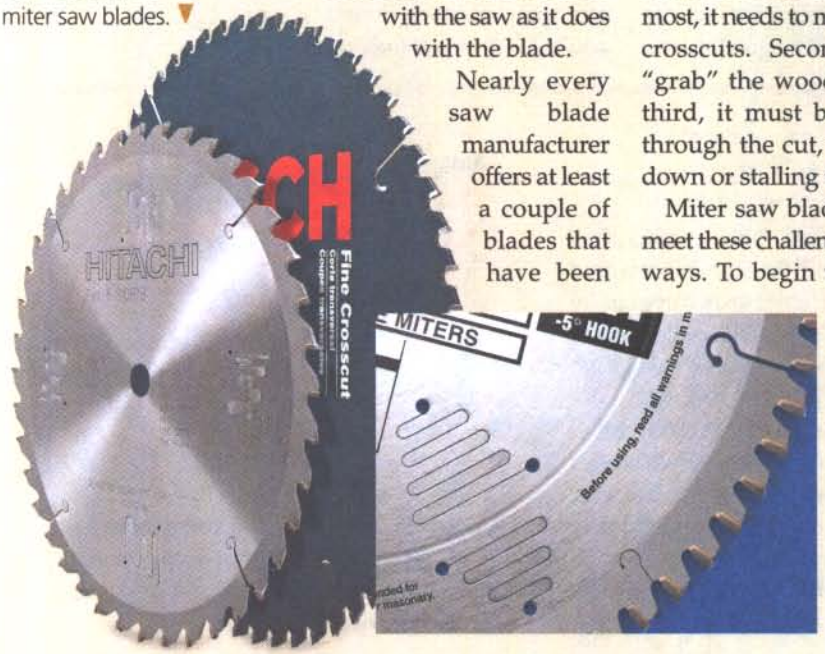

◄ Laser cut expansion slots at the edge of the blade allow it to expand without deforming as the plate of the blade heats up. The "squiggly" slots closer to the center of the blade are to help deaden vibration.

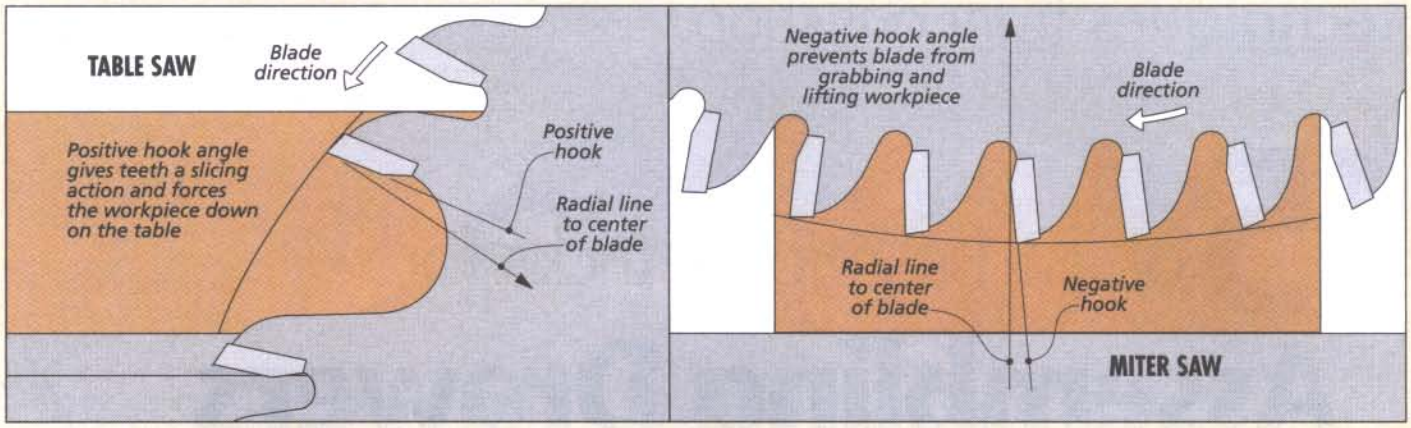

TOOTH GEOMETRY

While the number of teeth is definitely a factor in the quality of cut, the shape and profile of the teeth are equally important. If you look head-on at the teeth of a miter saw blade, you'll notice that the tops of the teeth are beveled in alternating directions, see drawing in margin at right.

TOP-BEVEL ANGLE. The reason for this is simple. This top-bevel angle creates a knife-like point that scores the edges of the cut. This scoring action minimizes chipout and splintering. The steeper the top-bevel angle on the teeth, the greater the scoring action on the cut. This is true not only for miter saw blades, but for crosscut and combination blades designed for table saws as well.

But there's a trade off. As you increase the top-bevel angle, the teeth become more "pointy" and fragile. This can lead to chipped and broken teeth. So manufacturers have to strike a balance between durability and quality of cut. For the cleanest cuts, you want a miter saw blade that has a top-bevel angle around 25°.

HOOK ANGLE. While the top-bevel angle does make a difference, the thing that really sets miter saw blades apart from other blades is the hook angle. (This is the angle of the front face of the tooth, when viewed from the side.)

Most table saw blades have a fairly high, positive angle. In other words, the teeth "lean" forward. This allows the teeth to aggressively slice through the wood as the workpiece is fed into the blade, see left drawing above. On a table saw, this works to your advantage because the rotation of the blade actually helps hold the workpiece down on the saw.

But that's not the case with miter saws. Because the blade is above the workpiece rather than below it, an aggressive hook angle on a miter saw blade will cause the blade to "self-feed" and grab the wood. To minimize this tendency, manufacturers use a fairly low hook angle on miter saw blades, anywhere from 0° to 5°. In fact, some miter saw blades actually have a *negative* hook angle. (The teeth lean back, instead of forward.)

Again, there's a trade-off. The lower the hook angle, the more power it takes to cut through the wood. That's because the teeth are hitting the wood almost head on, instead of slicing through the wood, see right drawing above. Despite this, I still prefer a blade with a 0° or negative hook angle, especially when using a *sliding* miter saw.

THIN-KERF. To compensate for the added effort of the lower hook angle, one final thing I look for in a miter saw blade is a thin-kerf design. Because they remove less wood, these blades don't require as much power as a regular-kerf blade. And this way, you'll still be able to get the ultimate in smooth miter cuts without overworking your saw.

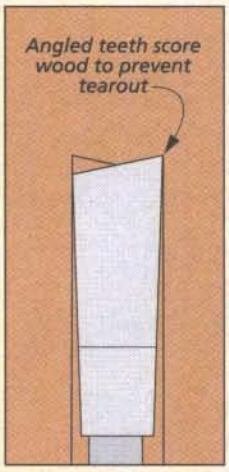

The teeth *on a miter saw blade are beveled in alternating directions to cleanly score the wood fibers along the sides of the cut.*

How-To: Push or Pull?

Every so often, I'll hear a group of woodworkers debating whether it's better to pull or push the blade through a cut when using a sliding compound miter saw. The short answer is that it's better to push. Here's why. If you pull the blade through the workpiece, the direction of the blade's rotation can pull the saw forward with great force, causing injury to you or damage to the saw.

If I'm cutting narrow workpieces, I generally just bring the blade down on the piece in a single, chopping motion (see photo on opposite page). But for wider pieces, I lift the blade and slide it back before squeezing the trigger. Then with the saw running, I lower it into the workpiece and push it forward, see photo at right.

15 of the best tips & tricks for Assembling Drawers

Assembling a drawer so it fits an opening perfectly can be a challenge. These shop-tested techniques will get you off to a great start.

Assembling a drawer seems fairly simple. Cut the parts to size, do a little joinery, then just glue it up.

Unfortunately, it's not always that easy. The process can be challenging, hectic, and an effort in frustration. Plus, it's all too easy to end up with a drawer that's a bit out of square or twisted so much that fitting it into an opening is all but impossible.

So what can you do to make the process of assembling a drawer easier and ensure success? Simple. Just follow the assembly tips and tricks that follow. They've been tested on the hundreds of drawers built in our shop over the years.

DRY ASSEMBLY

One of the best ways to ensure success is to assemble the drawer parts before you pull out a bottle of glue (**Tip #1**) — a "dry" assembly.

As you do this, it's a good idea to mark all the parts of each drawer clearly (**Tip #2**). This keeps matched drawer parts together and prevents problems from popping up later on.

I start dry assembling parts right after I cut the joinery for the corners but *before* I cut the grooves for the drawer bottom. By doing this, you can see whether the top and bottom edges are flush at the corners (**Tip #3**).

A small offset isn't a problem. You can easily sand or plane it flush. The problem is cutting the grooves before you do this. This results in offset grooves — and the bottom may not slide into place during assembly.

DRAWER BOTTOMS & GROOVES

The location of the drawer bottom isn't the only area of concern. For instance, the drawer bottoms I use

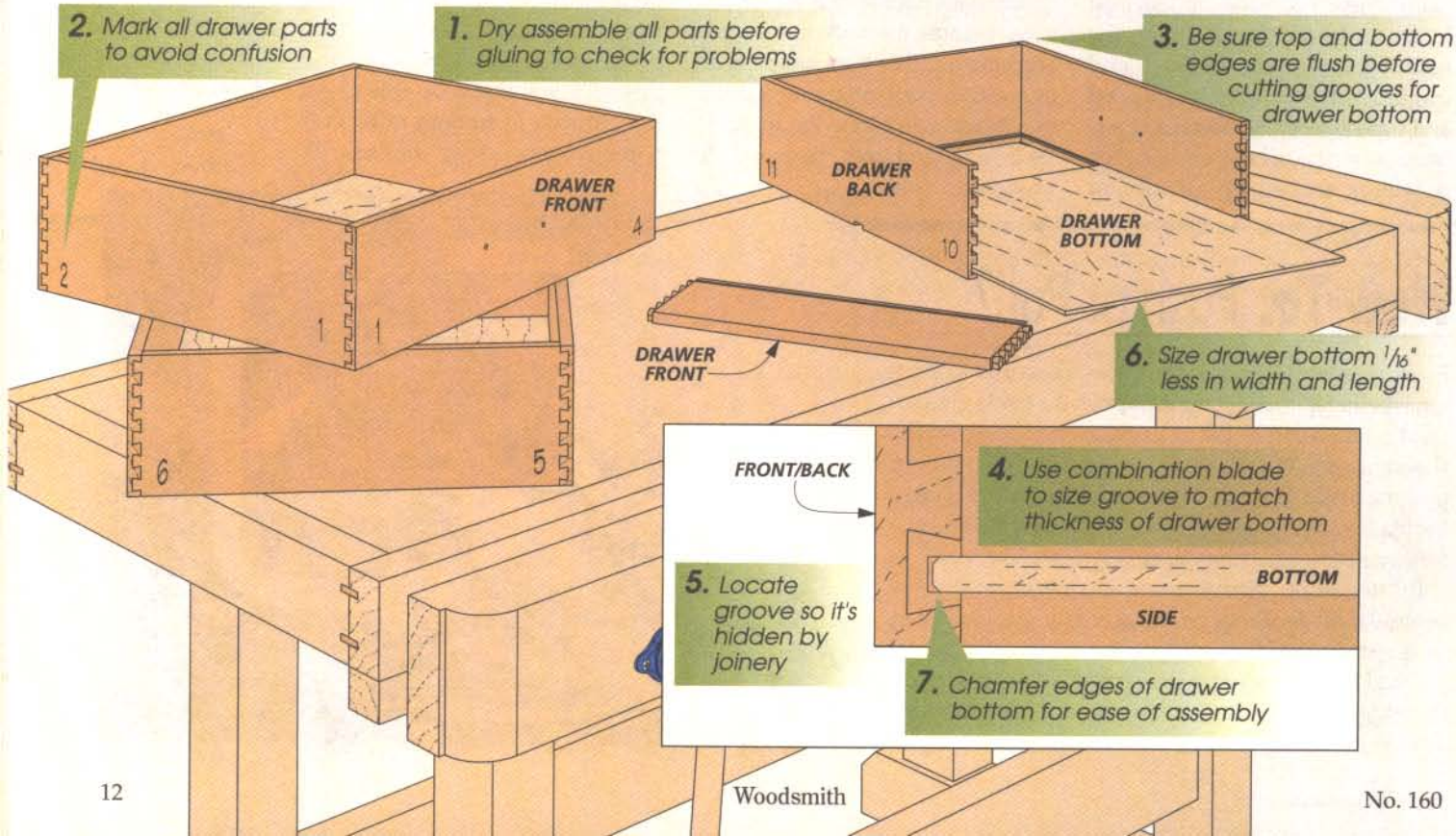

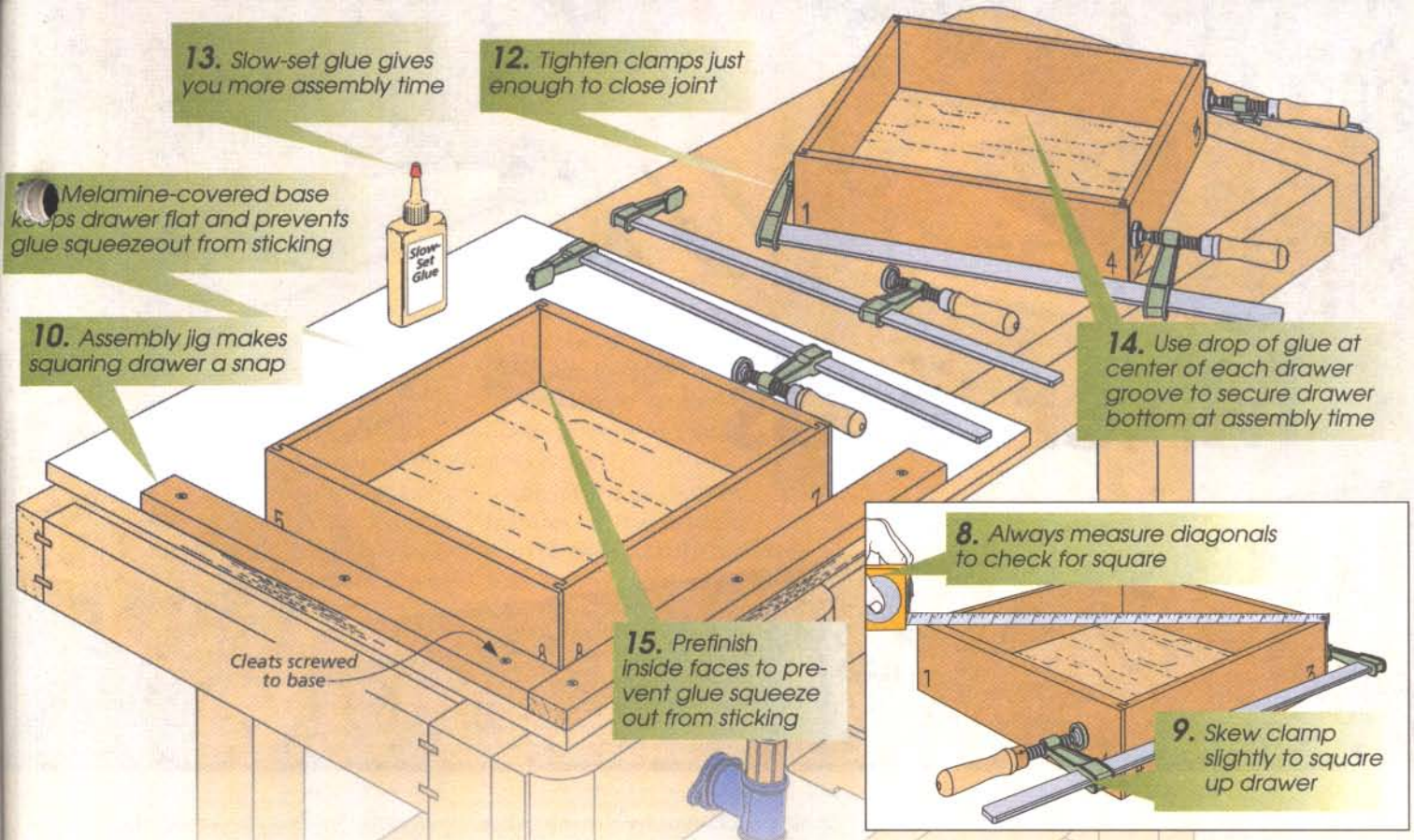

are made from 1/4" plywood or hardboard. The problem is these materials are often slightly less than 1/4" thick. So using a 1/4" dado blade to cut the grooves results in a loose fit.

To custom fit the groove to the thickness of the bottom, I use my combination blade and cut the groove in a couple passes, as in **Tip #4**.

There's one last thing to consider about cutting a groove for a drawer bottom. If you're using dovetails (or box joints) to assemble the drawers, be sure to locate the groove where it won't be seen, as shown in **Tip #5**.

Once you have the groove cut, there are a couple more tips that can make assembly easier. For starters, to allow the drawer bottom to slip into place easily, I like to cut the drawer bottom a 1/16" less in width and length (**Tip #6**). This way, the corner joints will pull together tightly. Finally, a slight chamfer around the edges of the bottom makes it easy to slip into the groove, as in **Tip #7**.

FLAT & SQUARE

For a drawer to fit and work well, it's important that it's flat and square. So as soon as I've clamped the drawer together, I make sure to check for square by measuring across the diagonals, like **Tip #8** shows. Equal measurements are what you're looking for here.

So what do you do if the measurements differ? The easiest thing to do here is to adjust the position of the clamps and angle them slightly in the same direction as the long diagonal, as illustrated in **Tip #9**. This will "pull" the drawer square.

If I have a number of drawers to make, I use a handy assembly jig, like you see in **Tip #10** above. The jig is nothing more than a pair of cleats screwed to a base at a 90° angle. Making the base out of a piece of melamine-covered particleboard (**Tip #11**) serves a couple purposes. First, it provides a very flat surface that virtually eliminates any twist. And second, any glue that squeezes out easily pops right off.

Regardless of whether you use a jig or not to square up the drawer, be sure you don't overtighten the clamps (**Tip #12**). It's all too easy to pull the drawer back out of square and even bow the sides in.

DEALING WITH GLUE

Despite its small size, gluing up a drawer can be a challenge. Besides gluing the joints used to connect the front and back to the sides, you have to deal with all the long grooves that hold the drawer bottom in place.

There are a couple things I like to do here that minimize the hassle and mess. First, I like to use a slow-set glue (**Tip #13**). It gives me enough time to apply glue where it needs to be without having to worry about a joint "seizing" up before everything comes together.

And instead of applying glue the entire length of the groove, I simply drop in a dab of glue right in the center of each groove, like you see in **Tip #14**. It's more than enough to lock the bottom in place and still help strengthen the drawer.

Cleaning up excess glue on the inside of the drawer is a pain. Wiping or scraping it out without marring the inside faces or simply making a mess is almost impossible.

To avoid this problem, you can pre-finish the inside face of all the drawer parts (**Tip #15**). I like to use a couple coats of shellac for this. Any glue squeezeout will peel right off.

As you can see, assembling a drawer doesn't have to be a challenge. Even if you only use a few of the tips and tricks shown here, the process will be a whole lot easier. W

table saw

Miter Sleds

After trying one of these miter sleds, the miter gauge that came with your table saw may end up just gathering dust.

Open any woodworking catalog and you'll find all sorts of gadgets and devices that promise to improve the accuracy of your table saw — as well as your woodworking. One of these accessories is a miter sled.

A miter sled is kind of a cross between a miter gauge and a sliding cutoff table. It can do just about everything that most of the fancy, aftermarket miter gauges can do. But it can also do some things that a miter gauge can't. Like crosscut a wide panel. In order to get a better sense of whether or not a miter sled might be valuable in your shop, let's take a closer look at what they do.

COMMON FEATURES. I took a look at three different miter sleds — the *Dubby* sled by *In-Line Industries*, the *Woodhaven Deluxe Sled*, and the *Delta Sliding Miter Jig*. (See page 49 for sources.) All three have some basic features in common.

To start with, they all have an MDF base. And attached to that base, is a miter bar that allows the sled to travel in the miter gauge slot. This isn't much different than a crosscut sled you could make in your own shop. But what really makes a miter sled useful is the fence.

The sleds I looked at all feature an extruded aluminum fence that pivots to allow you to cut any angle of miter. Depending on the brand of sled, you set the fence by lining it up with an angle scale on the base of the jig or by using one of several preset stops. In all cases, a simple knob or clamp locks the fence in place.

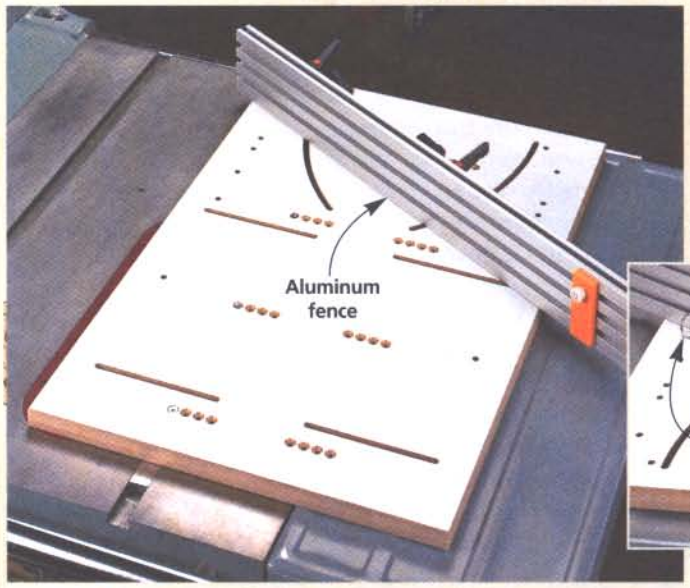

▲ Two sets of holes on this miter sled allow you to position the miter bar to use the sled on either side of the blade. The aluminum fence can also be repositioned.

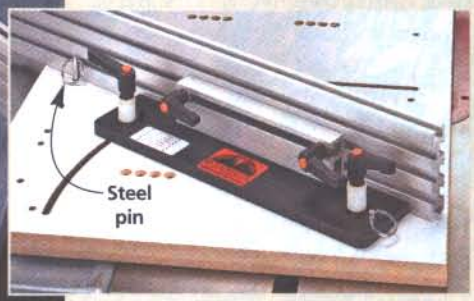

▲ A steel pin serves as a stop for the fence. By moving the pin to different hole locations, you can set the fence to commonly-used angles.

DEAD-ON MITERS

Although these sleds can do many things, frankly, cutting miters is where they really shine. Once you have the fence squared up with the blade, it's a simple matter to set the fence to the angle you want and cut perfect miters every time.

I think the thing that makes these sleds work so well is the fact that the workpiece rides on top of the sled, rather than on top of the saw table. With an ordinary miter gauge, it's too easy for the workpiece to shift along the face of the miter gauge as you push the workpiece forward, throwing off the accuracy of the cut.

But with a sled, the workpiece and fence remain fixed while the sled base slides across the top of the saw. The only thing you have to worry about is holding the workpiece against the fence during the cut. And all of these sleds have a T-slot along the top of the fence. So you can add a hold-down clamp to eliminate any concerns of the workpiece moving.

ZERO CLEARANCE. Before you use the sled for the first time, you'll need to trim the edge on your table saw, as shown in the photo below. What this does is provide a perfect fit between the saw blade and the edge of the sled. So the bottom of the workpiece is supported by the sled all the way up to the blade. This prevents splintering and tearout in your workpiece.

There is one downside to this, however. With most of these miter sleds, once you trim the sled to fit your saw, you can't use it on a different saw (unless the distance between the blade and the miter gauge slot is the same).

Some of the sleds allow you to reposition the miter bar on the base of the sled to use it in either the left-hand or right-hand miter gauge slot of the saw. But with at least one brand of sled, you have to specify which side of the blade you'll be using the sled when you place your order.

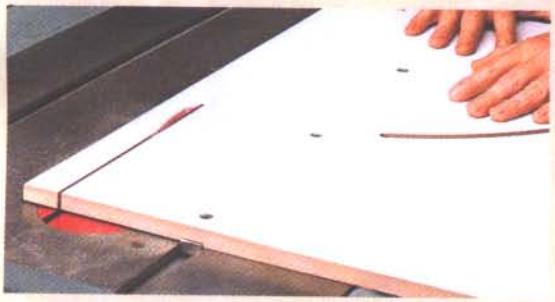

▲ Before using the sled for the first time, you'll need to trim the edge. This creates a zero-clearance fit between the blade and sled to prevent chipout.

BACK-UP SUPPORT. As I mentioned, one of the stand-out features of these miter sleds is the aluminum fence. The fences on all the sleds are moveable, so no matter what angle you are cutting, you can slide the fence right up to the blade to back up your workpiece.

One of the sleds even features a replaceable wood extension on the end of the fence to give your workpiece support on both sides of the blade. (It would be pretty simple to add an auxiliary wood face to the fences of the other sleds.)

PANELS. One thing that a miter sled will allow you to do that a miter gauge won't is crosscut panels. On a typical table saw, your crosscut capacity with a miter gauge is limited to around 12" in width. With a miter sled, you can cut about double that. That's because the sled supports the workpiece even if it's pulled back partially out of the miter gauge slot.

ADJUSTABILITY. As with any jig that has moving parts, being able to periodically re-calibrate the jig for accuracy is important.

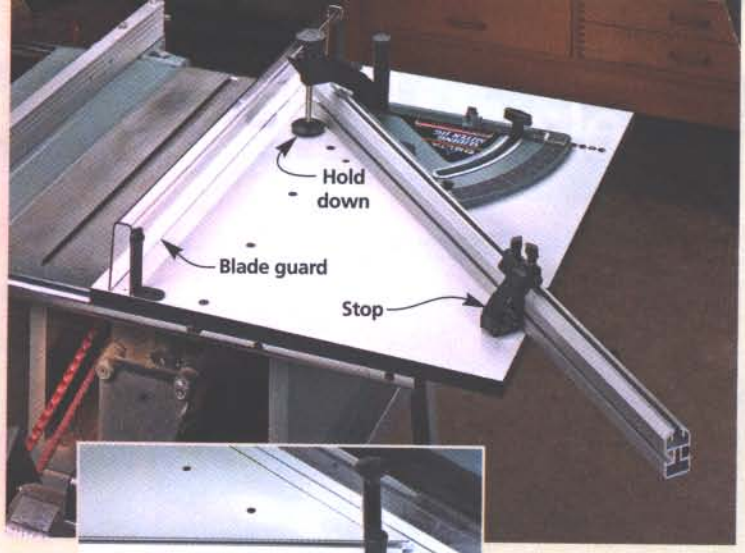

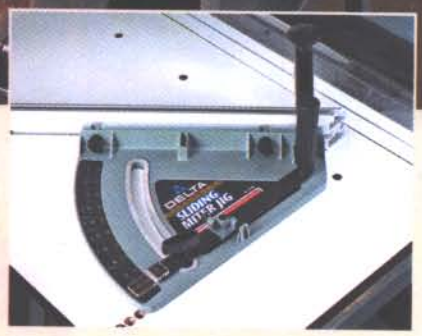

◄ To position the fence on this sled, simply loosen the knob and line up the cursor with the desired angle on the scale.

Fortunately, all these sleds allow you to adjust the scales and stops for the fence. Some of them even let you adjust the fit of the miter bar.

OTHER FEATURES. Of course, there are also other features that you'd expect to find on a crosscut sled — things like hold-down clamps, flip-up stops, and fence extensions. You can see some of these in the box below.

PRICE. The price of these sleds may seem steep at first — they range from about $135 to $170. But when you consider all they can do, and if you cut a lot of miters, a miter sled is definitely worth the money. And what about the miter gauge that came with your table saw? Well, it makes a great paperweight.

How-To: Feature Packed

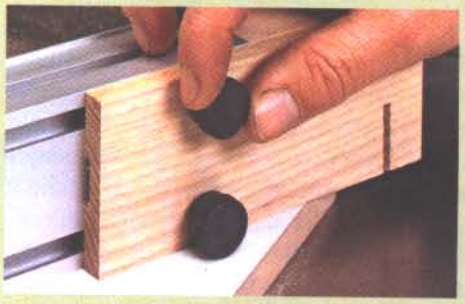

Adjustable Backer Board. *A replaceable wood extension on the end of the fence of this miter sled allows you to back up your workpiece completely when making a cut.*

Positive 90° Setting. *An adjustable stop makes it easy to quickly return the fence to a 90° setting for right angle crosscuts. You'll find this feature on all the miter sleds.*

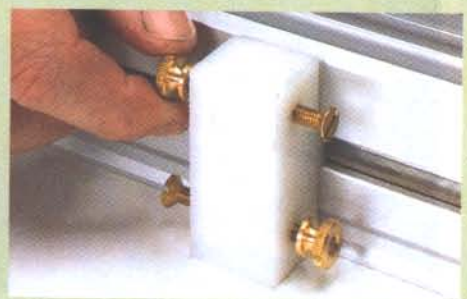

Adjustable Stop. *An adjustable stop on the fence allows you to cut multiple pieces to the same length. This stop is reversible, giving you two settings.*

▲ The storage case works just as well vertically. After standing it on end, just give the drawers a quarter turn, and then slide them back in place.

dvd Storage Case

Organize your collection of DVDs in style with this easy-to-build, versatile storage case.

It doesn't take long to build up a rather sizable collection of DVDs. But the challenge is keeping them all organized and neatly stored. That's just one of the reasons I like the DVD storage case you see in the photo above.

Another is that it's easy to build. The few simple joints you need to make can all be done at the router table.

The final thing that makes this project unique is the design of the case. You can set the case horizontally (photo above) and stack a couple together so they'll look like an old library card catalog. Or stand a single case on end (photo at left) where it resembles a miniature filing cabinet.

Regardless of its position, the drawers slip in place smoothly. And your collection stays organized so you'll always be able to find the DVD you're looking for.

CONSTRUCTION DETAILS

OVERALL DIMENSIONS: 22"W x 11⅛"D x 7½"H

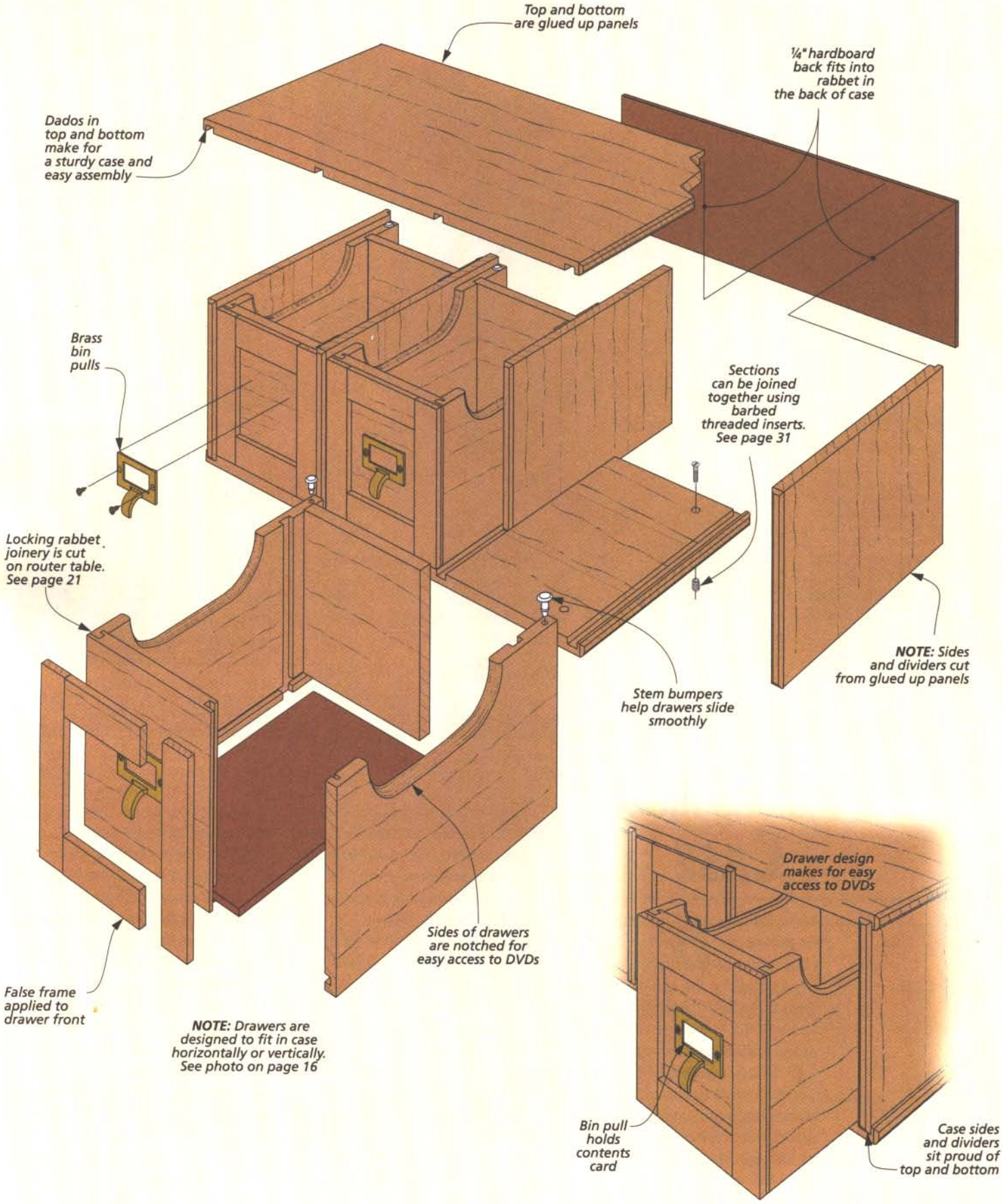

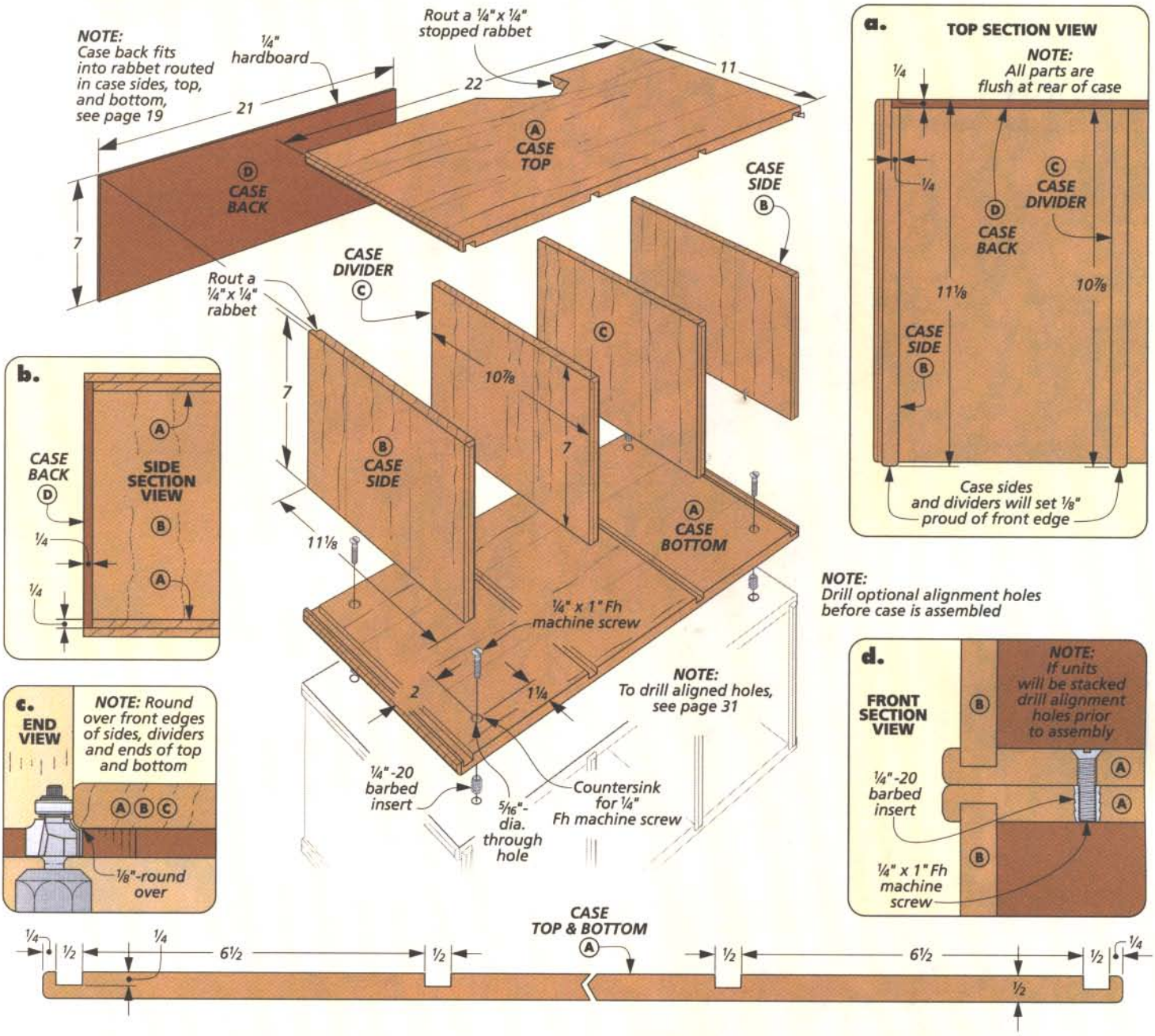

making the CASE

As you can see in the drawing above, the storage case is nothing more than a box with a couple of dividers. The key to making the box is creating perfectly square openings so that the drawers will fit the case whether it's sitting horizontally or vertically.

To do this, I started by cutting the top and bottom to final size and then headed to the router table. The router is the best choice for making the dadoes that the sides and dividers of the case will fit into.

Since you'll see the dado at the front of the case, a straight bit will cut a smooth, clean bottom and create a tight-fitting joint. The next page shows you how this is done.

STOPPED RABBETS. While you're at the router table, you'll want to rout a rabbet along the back edge of both the top and bottom. It's sized to accept the back of the case (detail 'b'). Just be sure to start and stop the rabbet without routing through the ends of the top and bottom.

At this point, you can set the top and bottom aside and work on the case sides and dividers. What's important to note here is that the sides are a 1/4" wider. This allows for a rabbet along the back edge to hold the back of the case (detail 'a'). And both the sides and dividers are sized to project slightly (1/8") past the front edge of the top and bottom.

You're just about ready to assemble the case. But first you'll need to ease the sharp edges by routing or sanding a small roundover on the front edges of the sides and dividers, as well as the ends of the top and bottom, as shown in detail 'c' and on the opposite page.

Finally, if you're building more than one case, detail 'd' and page 31 show you the steps to take to join them together. Once that's complete, you can glue up the case and install the hardboard back.

How To:
Router Joinery

As I mentioned earlier, I used dadoes to join the case sides and dividers to the top and bottom. Since this joint will be "front and center," it's very important to cut perfectly smooth, flat, and chipout-free dadoes. To do this, I used my router table and a ½" straight bit, as in the photo at right.

ROUTING THE DADOES. The key to making the drawer compartments of the case identical in size is cutting evenly spaced and matched dadoes in both the top and bottom.

All it takes is a couple simple steps, like you see in Fig. 1 at right. Start by routing the dadoes for the dividers. To do this position the fence so it's 7¼" away from the bit. Then set the router bit to cut ¼" deep.

To prevent chipout as you complete the cut, use a backer board to push the workpiece over the bit, like you see at right. After completing the first cut, simply rotate the workpiece end for end and rout the dado for the second divider. Then, repeat the process on the bottom of the case.

The next step is to rout the dadoes at the ends. What's important here is to reset the fence so that after routing the two dadoes, the spacing between all of them is identical. In my case, I reset the fence ¼" from the bit.

ROUTING STOPPED RABBETS. You'll also need to make a couple of rabbets to hold the back of the case. If you look closely, you'll notice the rabbets are "stopped." That's so they aren't visible on the sides of the case. To make these cuts, you'll want to switch to a ¼" straight bit.

To match the depth of cut, you can use one of the dadoes you just routed as a setup gauge, as shown in Fig. 2 at right. I found it easiest to align the workpiece over the bit and then "drop" it down to begin the cut (Fig. 3). Just be sure to stop the cut when you reach the dado that's at the end of the workpiece.

Finally, rout or sand a roundover to ease the edges (Figs. 4 and 5).

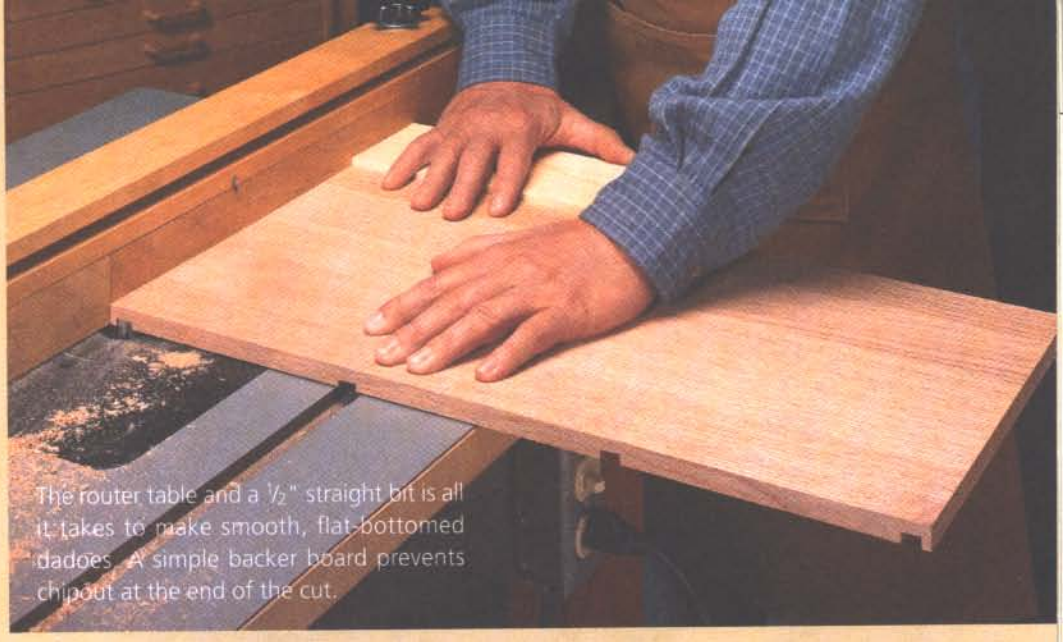

The router table and a ½" straight bit is all it takes to make smooth, flat-bottomed dadoes. A simple backer board prevents chipout at the end of the cut.

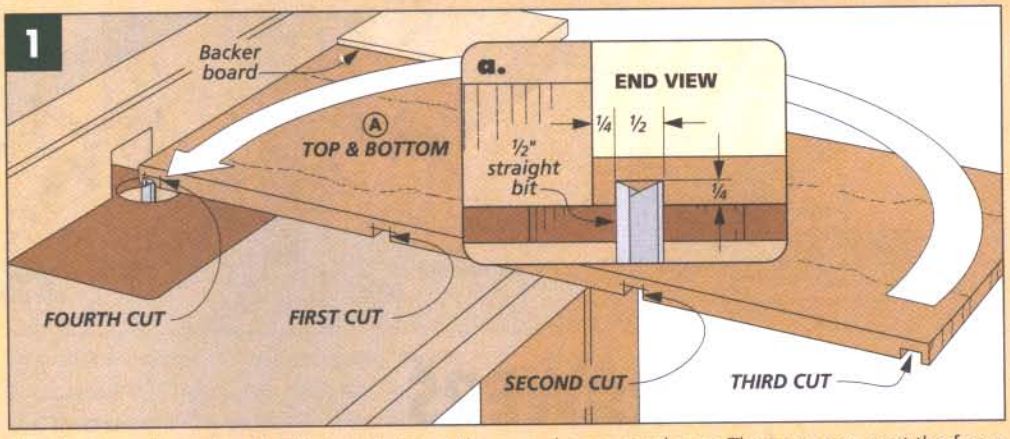

The first step in cutting the dadoes is to set the fence to cut the dadoes for the dividers. After you rout one dado, flip the workpiece end for end and make a second pass. Then you can reset the fence to space the dadoes evenly, as shown in detail 'a,' and rout the dadoes for the sides.

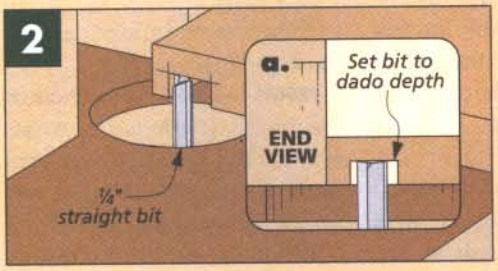

After installing a ¼" bit in the router, you can use one of the dadoes you just routed as a setup gauge for setting the depth of cut for the rabbet.

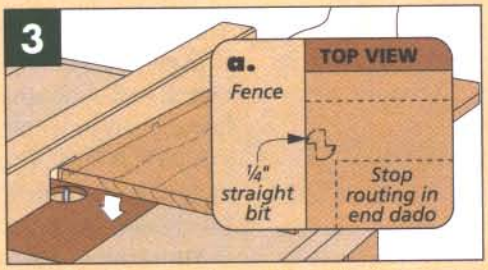

Reset the fence and rout the rabbet along the back edge of the top and bottom. Stop the cut when you reach the end dado (detail 'a').

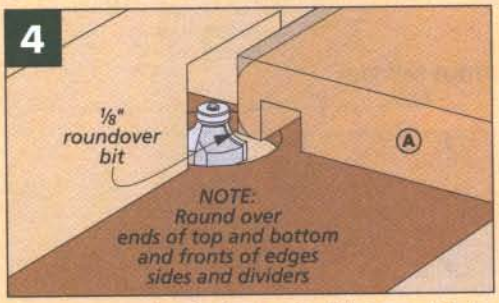

After routing the dadoes and rabbets, switch to a ⅛" roundover bit to soften the ends of the case top, bottom, sides, and dividers.

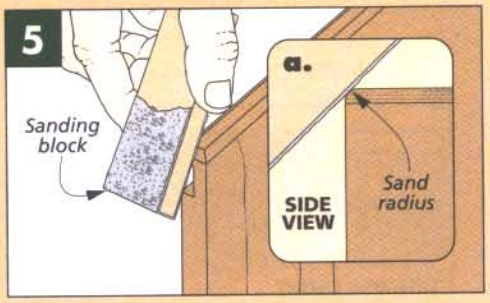

It's almost impossible to rout a roundover on the small ends of each piece. So it's best to switch to fine sandpaper and a sanding block.

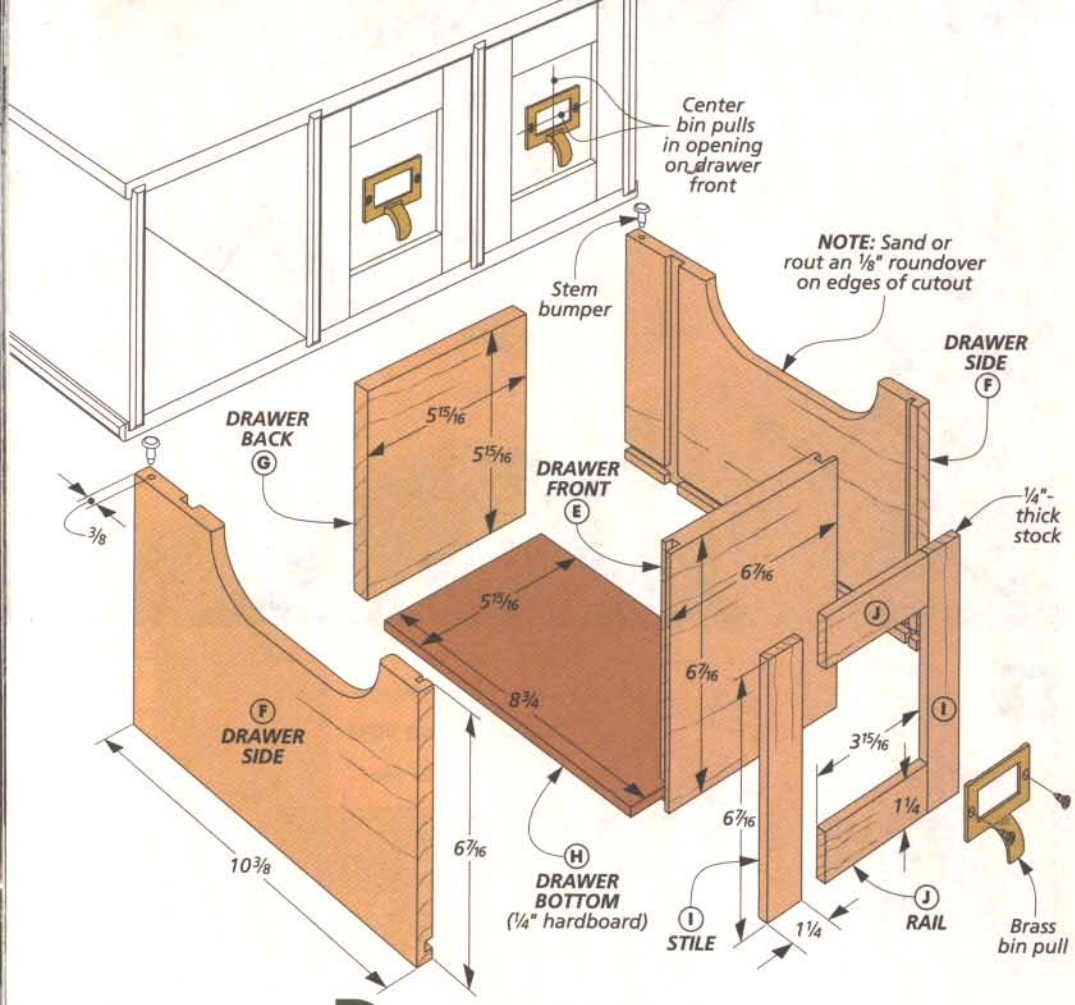

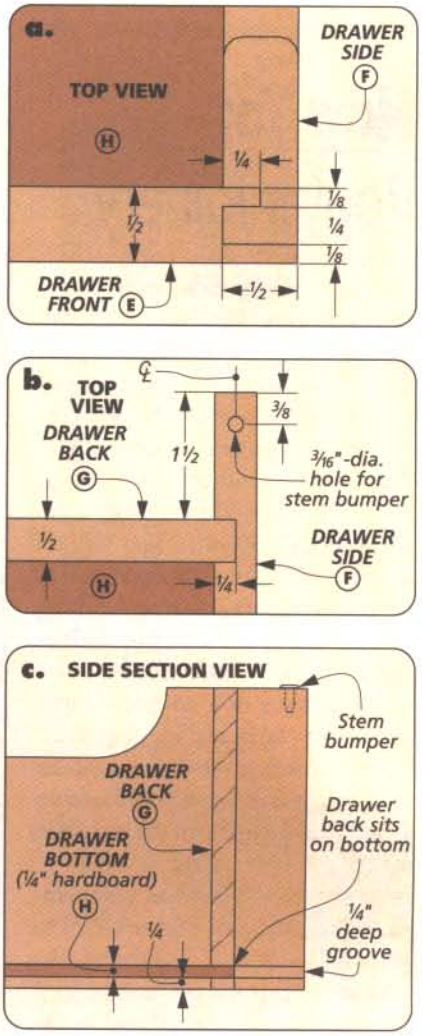

two-way DRAWERS

With the case complete, you're ready to turn your attention to the drawers. The challenge is to build the drawers to match the openings in the case so they fit well — whether the case is set horizontally or vertically.

DRAWER DETAILS. The drawers are built to have a small 1/16" clearance side to side and top to bottom. And if you take a quick look at the drawing above, you can see how the back of the drawer is recessed just a bit. This way you can pull out the drawer and easily access the DVDs without the drawer falling out of the case. Finally, to "dress up" the fronts of the drawers, I added a miniature hardwood face frame.

FRONTS AND SIDES. Since the front of the drawer determines the overall fit, I started by cutting the drawer fronts to fit the opening, allowing enough for the 1/16" clearance.

While I was at it, I cut the side pieces to the same width and trimmed them to final length. Then, to make it easy to reach a DVD inside the drawer, I made a cutout along the top edge of each side, as in the drawing above and pattern below.

ROUTING A LOCKING RABBET JOINT. To join the fronts and sides, I used a locking rabbet joint, as shown in detail 'a.' The opposite page covers everything you need to know.

ADDING THE BACK & BOTTOM. Once you have the locking rabbet joints cut, you're ready to add the back and bottom. The back fits into dadoes cut in each side piece (detail 'b') and the bottom fits into grooves cut in the front and sides (detail 'c'). After cutting the drawer bottom and back to size, you can glue up the drawer.

FINISH IT OFF. To give each drawer a finished look, I created a face frame by gluing on thin strips of hardwood on the drawer fronts (see drawing). Finally, I added some plastic bumpers and a brass bin pull.

Now all that's left to do is round up your DVD collection, organize them the way you want, and then slip them in place.

DRAWER CUTOUT PATTERN

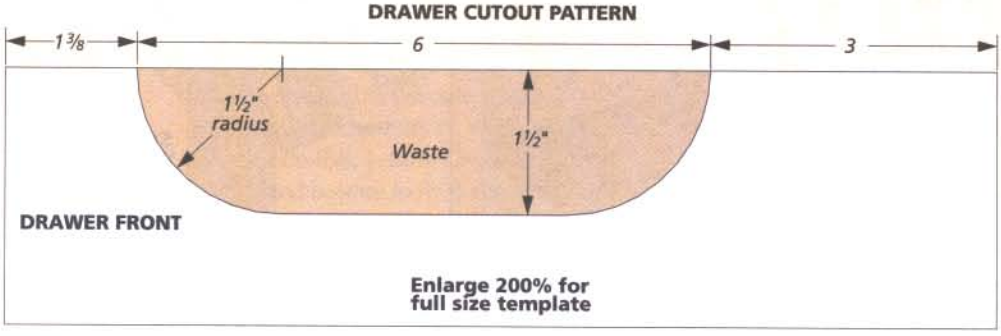

How To:
Locking Rabbet

Even though the drawers of the DVD case are small, they're sure to get a lot of wear and tear. So to make sure the drawers stand the test of time, I used a locking rabbet joint to attach the front to the sides.

START WITH A CENTERED GROOVE. Detail 'a' on the opposite page shows you what an assembled locking rabbet joint looks like. This may look challenging at first. But you can make this joint with a few simple steps.

The first thing you'll need to do is cut a centered groove on each end of the drawer front. You can see how I did this in the photo and Fig. 1 at right. But there are a few things I should point out.

First, I used a 1/4" straight bit and set the bit to cut the full depth. Then using an auxiliary table you can cut the groove in two passes.

To do this, you'll want to be sure you have the fence set to center the groove perfectly. This is where some test pieces can really help you out. By making a few practice cuts and then adjusting the fence, you'll be able to quickly center the groove.

I wanted to be sure I made a clean cut at both ends of the groove. So I used a backer board to support the workpiece. This eliminates the chance of any chipout as the router bit exits the end of the workpiece.

Now, you can go ahead and make the cuts on all the drawer fronts.

TRIMMING THE TONGUE. After making the grooves, you'll need to trim away part of the drawer front to create a tongue. This tongue fits the dado you'll be cutting in the side of the drawer. In Fig. 2 at right, you can see how I used a 1/4" straight bit to trim the tongue to final length.

COMPLETING THE JOINT. All that's left to complete the locking rabbet joint is to cut a narrow dado in each drawer side to mate with the tongue. For this you'll need to switch to an 1/8" straight bit. Again, Fig. 3 at right covers the setup you'll need to get the fit of the tongue just right.

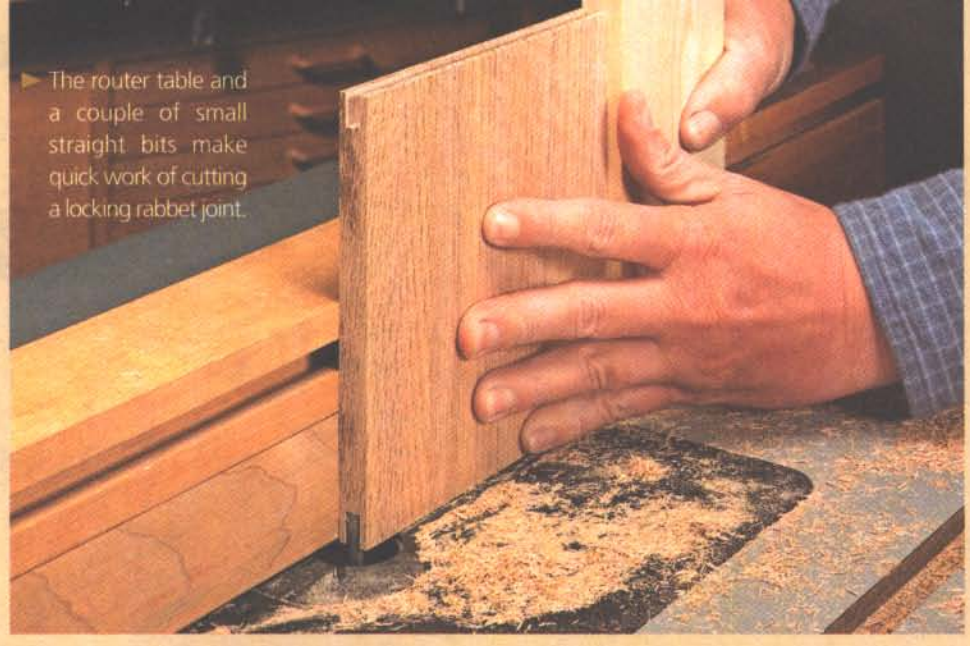

The router table and a couple of small straight bits make quick work of cutting a locking rabbet joint.

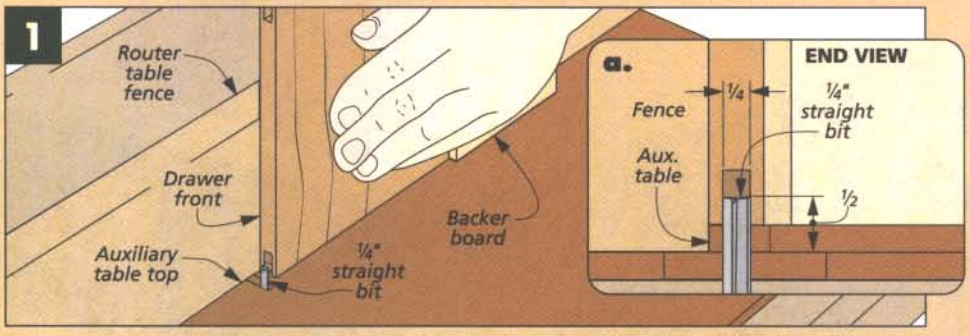

To center a groove in the ends of the drawer front, use a 1/4" straight bit and set the depth to make a full 1/2" deep cut. Next, add an auxiliary table and adjust the fence. Make one pass, and then remove the auxiliary table, then make a second pass.

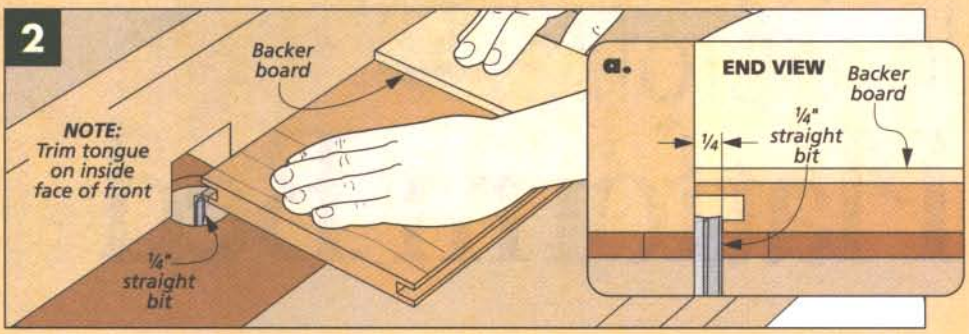

Next, you'll need to trim the end of the drawer front to create a small tongue. To do this in a single pass, I used the 1/4" straight bit already installed in my router and the setup shown in detail 'a.' Here again, a backer board prevents the back edge from chipping out.

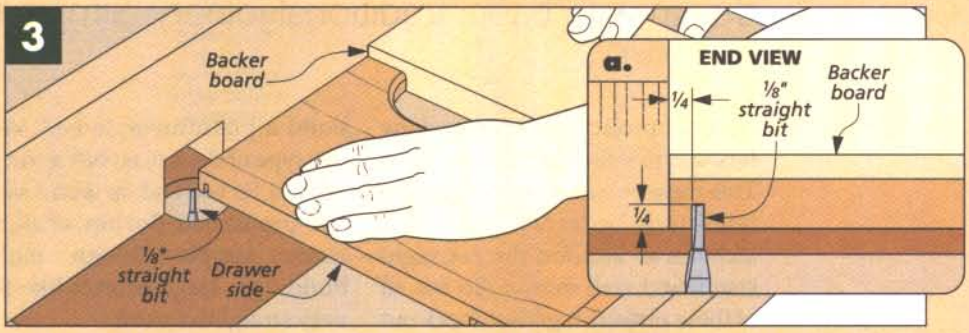

All that's left to complete the locking rabbet joint is to cut a narrow dado in each side piece to fit the tongue on the drawer front. For this you'll need to install a 1/8" straight bit and make a single pass. Detail 'a' shows you the setup you'll need for doing this.

low-profile Platform Bed

This project combines the best of both worlds — a modern, elegant design with basic, traditional joinery. Simple techniques make it easy.

Here's a project I've been looking forward to building for some time. This queen-size bed completes the five-piece bedroom suite that includes an armoire, dresser, night stand, and wall mirror. (To see all of these projects together, check out the photo on the back cover.)

To match the contemporary look of the other pieces, we decided to build a platform-style bed. With this type of design, no box spring is needed. So you end up with a sleek, low-profile bed. But best of all, the clean, simple design makes building a large project like this very straightforward.

For starters, the headboard and footboard are both put together with basic mortise and tenon joinery. Nothing fancy or tricky here. All you have to do is chop a few mortises, cut some tenons to fit, and you're almost done. And the panels in headboard simply slide into grooves cut into the frame pieces. To complete the job, you just cut a couple of rails, install some simple hardware, and the bed is ready to assemble.

CONSTRUCTION DETAILS

OVERALL DIMENSIONS: 68"W x 86½"L x 44"H

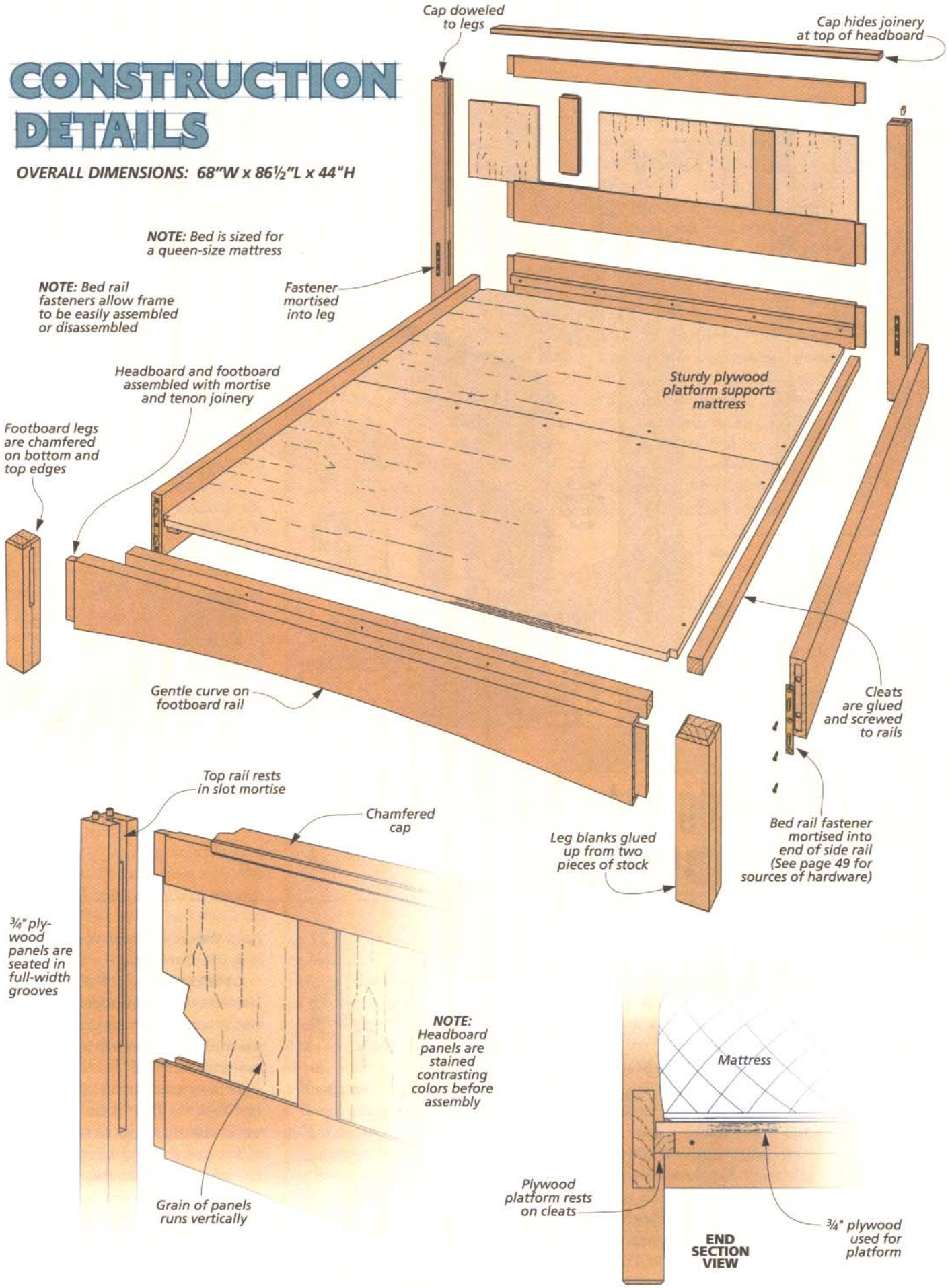

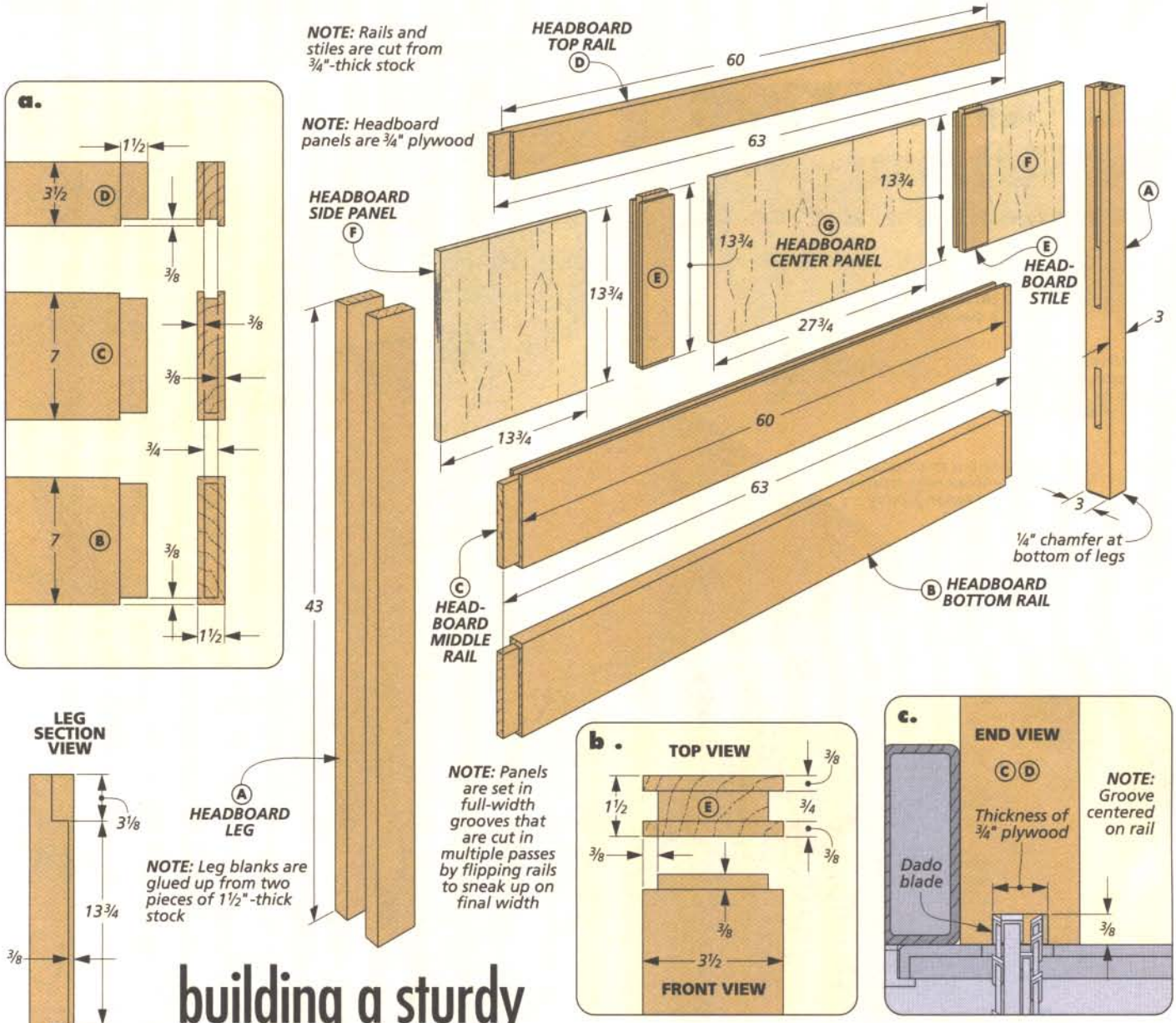

building a sturdy HEADBOARD

On this project, I decided to get the most involved work out of the way first. That means I started by putting together the headboard.

LOOK IT OVER. Take a look at the drawing above and you'll get a good idea of how the headboard is put together. You'll see that it's really nothing more than a large, mortise and tenon frame.

You start with two sturdy legs and join them with three rails. The space between the upper rails is filled by a pair of vertical stiles and three plywood panels set into grooves. I think the main challenge you'll find might just be the large size of the headboard. But it's not unmanageable.

THE LEGS. To get started, you'll need to make the two stout, 3"-square legs. These will give you a solid foundation. As you can see above, the leg blanks are glued up from two pieces of 1½"-thick stock. Once that job is completed, you can cut them to length, and then turn your attention to the mortise and tenon joinery.

THE LEG JOINERY. As shown in the left margin, each leg has three mortises. Two long mortises for the lower and middle rails, and a narrower, open mortise to capture the upper rail. This open-ended mortise makes the assembly go a little easier and it will be hidden by a cap piece added later. Finally, a shallow groove, sized to hold the side panels, connects the two upper mortises.

KEEPING IT SIMPLE. But before you get started on the layout, let me point out a couple things you need to know. First, as shown above, you want to orient the leg blanks so the glue lines are along the sides of the headboard. They'll be a lot less noticeable this way.

The second item has to do with the width of the mortises and the grooves in the frame. I did things just a bit differently here.

To keep things simple, I wanted to set the three plywood panels into full-width, centered grooves cut into the frame parts. But now since ¾"

plywood is usually a bit undersize, this requires cutting custom-sized grooves to get a good, snug fit. I didn't want to cut full 3/4"-wide mortises and then have to cut slightly narrower grooves. So what it boils down to is that I sized the width of the mortises to the plywood as well. It's a pretty minor compromise that makes the joinery go a lot easier.

GETTING TO WORK. Now you're ready to get busy laying out the joinery. I just kept a scrap of the plywood in my apron pocket to use for a layout and joinery gauge.

Once the layout is complete, the drill press, a couple of sharp chisels, and the router table will take care of the hard work. The box at right will lead you through the process.

When you finish routing the groove in the last step, you'll want to stay at the router table for just a bit longer. Install a chamfer bit and then use it to ease the bottoms of the legs. This will keep them from chipping when the bed is moved.

RAILS AND STILES. With the legs ready to go, you can turn your attention to connecting them. Your first task is to cut the the three rails and the two stiles to size. Once this was done, I swapped out the standard blade on my table saw for a dado blade to handle the joinery.

Here again, you want to work around your panel plywood. So first, I cut the centered grooves in the upper and middle rail and the two stiles for the panels. Just sneak up on the width of the groove by turning the pieces end for end between passes, as in detail 'c.'

After the grooves are completed, all the pieces get tenons on both ends. Since the tenons on the rails and stiles are all the same thickness, I first cut the stub tenons on the stiles to get the blade setting right. (Bury the blade in an auxiliary fence.) Then you can cut the longer tenons on the three rails, as in detail 'a.'

THE PANELS. With the joinery complete, all you need now are the three plywood panels. After cutting them to size, I did a dry fit of the headboard and then gave some thought on how to approach the glueup.

How-To: Cut the Leg Joinery

For me, the real challenge to the leg joinery was doing things in the right order and with the right technique.

I started the job at the drill press, as shown in Fig. 1. The completed mortise will be slightly less than 3/4" wide, so I installed a 5/8"-dia. Forstner bit to drill out the waste. A fence clamped to the table will take any guesswork out of centering the holes in the mortises. The tenons on the rails will be 1 1/2" long, so you'll want to go just a little deeper with the mortises (1/16" should do it).

When the work at the drill press was done, I took the legs to the workbench to clean up the mortises (Fig. 2). The key thing to remember here is that you want to match the width of the mortises to the thickness of the plywood for the panels. A scrap of the plywood makes a perfect test tenon to check the fit.

When you set down your chisels, the final task is to connect the middle and upper mortises with a panel groove. And since the groove ends in the middle mortise, I decided the router table was the best place to do the work (Fig. 3).

The mortises in the legs make routing the grooves easier by giving you a starting and stopping point for a 1/2"-dia. straight bit. To keep the groove centered, make a pass and then flip the leg end for end for a second pass. Again, I used a scrap of my plywood to check for a snug fit.

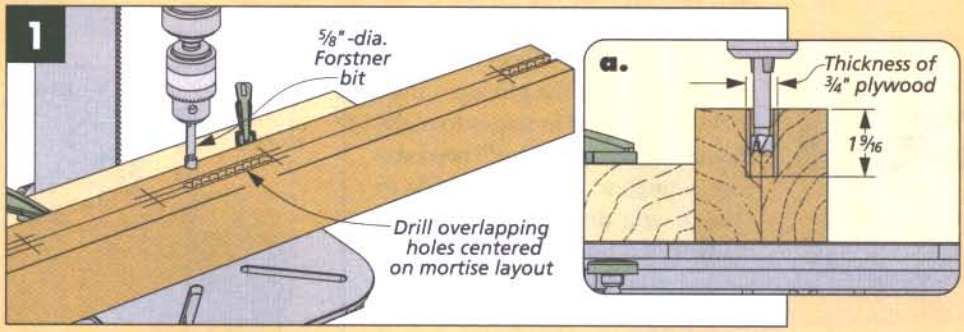

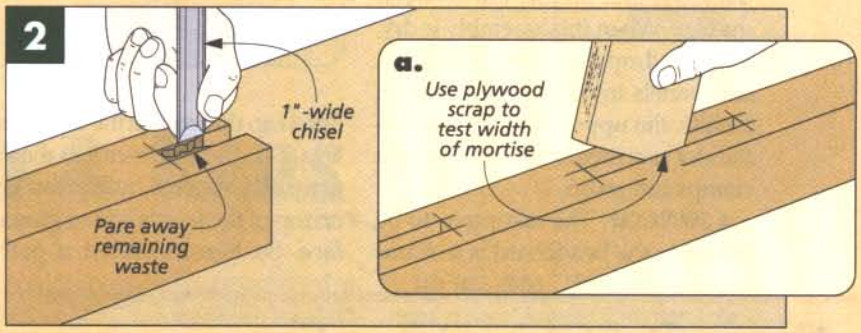

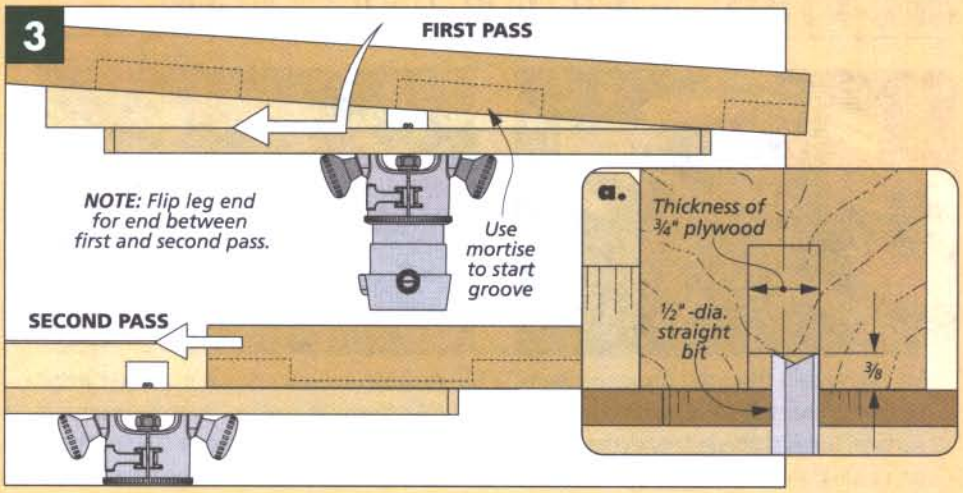

capping the HEADBOARD

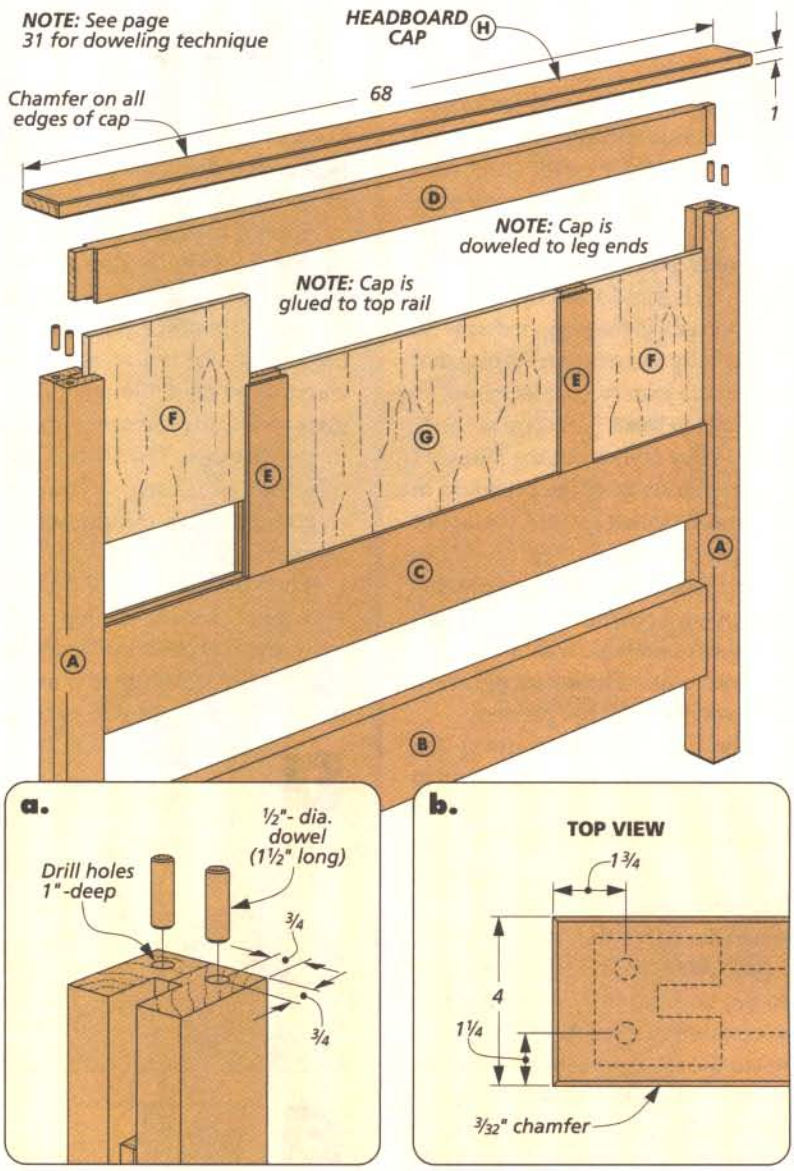

The joinery is complete but don't get too anxious and start gluing the headboard together just yet. There's a certain order to things that you'll want to know about first.

STAIN NOW. You'll remember that the headboard frame and the panels are stained contrasting colors. This left me with a decision — should I stain before or after the assembly. Prestaining made the most sense. So at this point, I took the time to sand and stain all the parts. You'll find the two stain colors at our website.

THE ASSEMBLY. After the stain was dry, I carried all the pieces to the bench and got out the glue and clamps. The large size of the headboard can make the glueup a little tricky. So I took it in stages to make it more manageable. You'll need six-foot clamps to reach from side to side. If you don't have any long clamps, the box below gives you several good options.

I started the assembly by gluing the lower and middle rail between the legs. When this assembly is dry, you can drop the stiles (with glue) and panels into place from above. Finally, the upper rail is glued into the slot mortises in the legs and the clamps can go on.

A SIMPLE CAP. The last piece to be added to the headboard is a chamfered cap that covers the top rail and legs. Glue holds the cap to the long grain of the top rail but the end grain on top of the legs is a poor glue surface. So here, I added a pair of dowels between each leg and the headboard cap, as shown in details 'a' and 'b.' If you turn to page 31, you'll find an easy way to match up the holes for the dowels.

Woodsmith GO ONLINE EXTRAS

You can find information on the stains used on the bed at www.Woodsmith.com

Shop Tips: Stretching Your Clamps

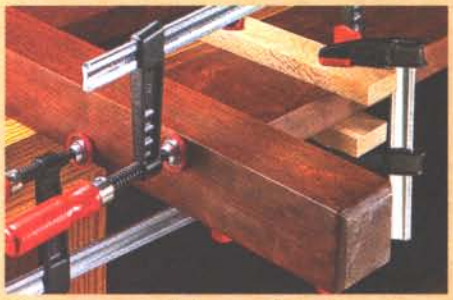

▲ You can avoid the need for long clamps by giving yourself an alternate clamping surface. Here I tightened my clamps down on cleats clamped to the rail.

▲ A cheap solution is to make two clamps into one. All it takes is an inexpensive coupler from the hardware store to make two sections of pipe into one long section.

▲ If one pipe clamp won't do the job, I'll put two to work, back-to-back. The two pads are turned 90° so the clamps can be tightened against one another.

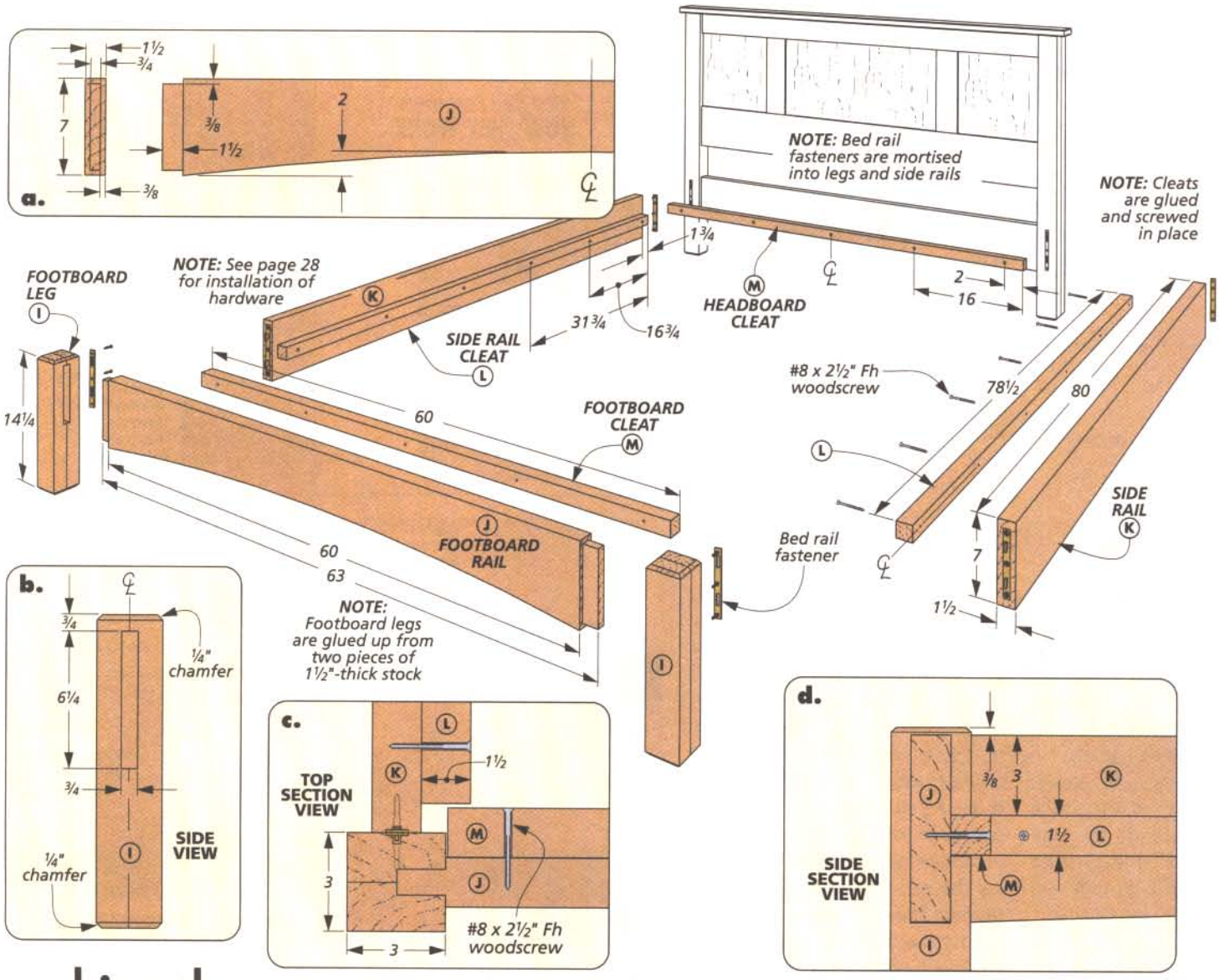

making the FOOTBOARD & RAILS

With the headboard complete, most of the hard work is out of the way. The next job is to build a footboard and a pair of rails to wrap up the frame. Then you'll add the hardware to hold everything together. And finally, some cleats to support a platform for the mattress.

THE FOOTBOARD. First comes the footboard. You can see in the drawing above, it's much simpler than the paneled headboard — merely a pair of legs with a curved rail connecting them. Here again, mortise and tenon joinery supplies the strength.

I'll only mention a couple things about the legs for the footboard. Here, I didn't have plywood panels to worry about, so I cut mortises that were a full ¾"-wide (detail 'b'). And since the footboard has no cap piece, I routed a chamfer on the tops of the legs as well as the bottoms.

The footboard rail is pretty much self explanatory. The only twist here is the gentle curve cut into the lower edge of the rail. You'll want to do this after the tenons have been cut, as shown in detail 'a.'

To lay out the curve, I simply used a flexible strip of wood pulled into a slight bow by a piece of string tied between the two ends. And once you've marked the line of the curve on the rail, you can take it to the band saw to cut it to shape.

THE SIDE RAILS. The side rails only need a short mention. Just cut them to size and they're ready to go.

THE HARDWARE. Now that you have all the frame pieces made, the next step is to install the bed hardware used to fasten everything. For details on this, you can turn to page 28.

THE CLEATS. With the fasteners in place, the frame can be set up and the cleats that support the platform installed. First, I cut the headboard and footboard cleats to fit and glued and screwed them to the rails (details 'c' and 'd'). The side rail cleats need to be set back from the ends of the rails in order to clear the end cleats, as shown in detail 'c.'

knock-down BED RAIL FASTENERS

▲ These bed rail fasteners give you the best of both worlds. They make setting up the frame easy. And once it's together, it'll stay together.

When you assemble a bed frame, you want to accomplish two things. First, you want it to be solid as a rock. Next, you need to be able to assemble and disassemble the bed frame quickly and easily for moving. Well as you might guess, there's hardware available that handles both jobs and it works great.

HOW THEY WORK. The drawing at upper right shows how the bed rail fasteners I used (and most other types) work. The male plate of the fastener (left in drawing) is mortised into the end of the side rail. It has a pair of tapered hooks that engage two slots in the female plate of the fastener, mortised into the leg. As the rail drops into place, the tapered face of the hooks pulls it tightly against the female plate locking the leg and rail together. All it takes to reverse the lock is a solid "thump" on the bottom of the rail.

MORTISES. The only catch is, to get the best result, the fasteners have to be mortised snugly in place, flush to the surface. This means cutting eight mortises, four of these into tough end grain. So it didn't take me long to decide that routing these mortises was the best way to go. It was an easy job using a simple jig. You'll find the details on page 30.

FINISH UP. Once the shallow plate mortises were routed, I got out a hand drill to complete the job. As you can see in the upper drawing, both parts need a relief area drilled out behind the plate. The side rail mortises simply need a couple of shallow holes to provide clearance for the nubs on the back of the plate (Fig. 1). On the legs, I drilled a deeper, secondary mortise behind the slots in the plate to accommodate the fastener hooks as in Fig. 2.

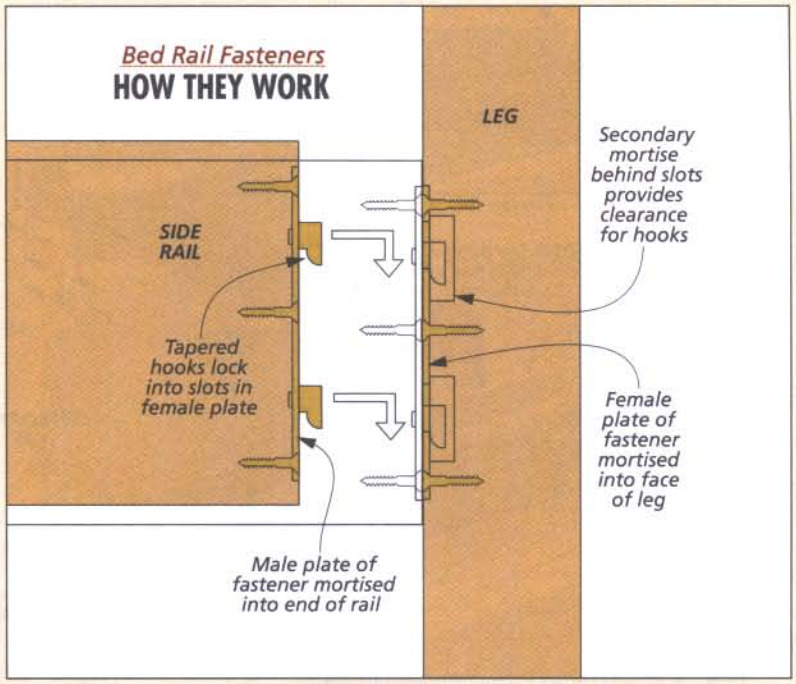

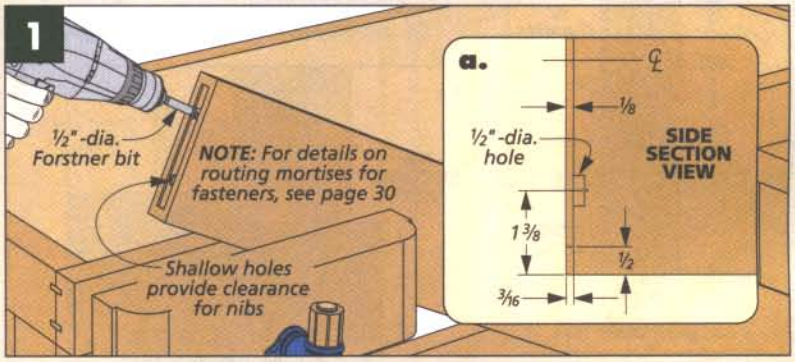

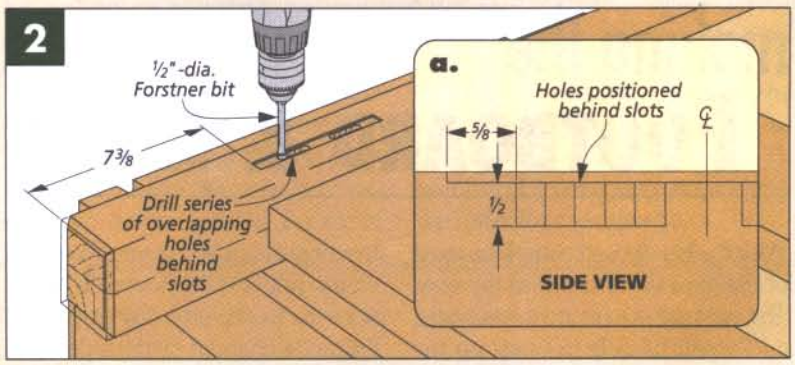

◄ Seated in a snug fitting mortise on the leg, the slotted plate provides a solid attachment point for the side rails.

adding the PLATFORM

All you need now is a platform to support the mattress. And for this job, I cut two ¾" plywood panels.

To get a good fit, you'll want to assemble the bed frame before cutting the panels to size. Then two corners of each panel are notched to fit around the legs (detail 'a').

Finally, to make certain there wasn't any sag across the center seam, I fastened a brace between the panels (detail 'b'). The easy way to do this is to set one panel in the frame and then screw the brace to it. Then the second panel is dropped in place and screwed to the brace.

Now, I took it all apart to complete the finish. And after a quick reassembly, it's ready for use.

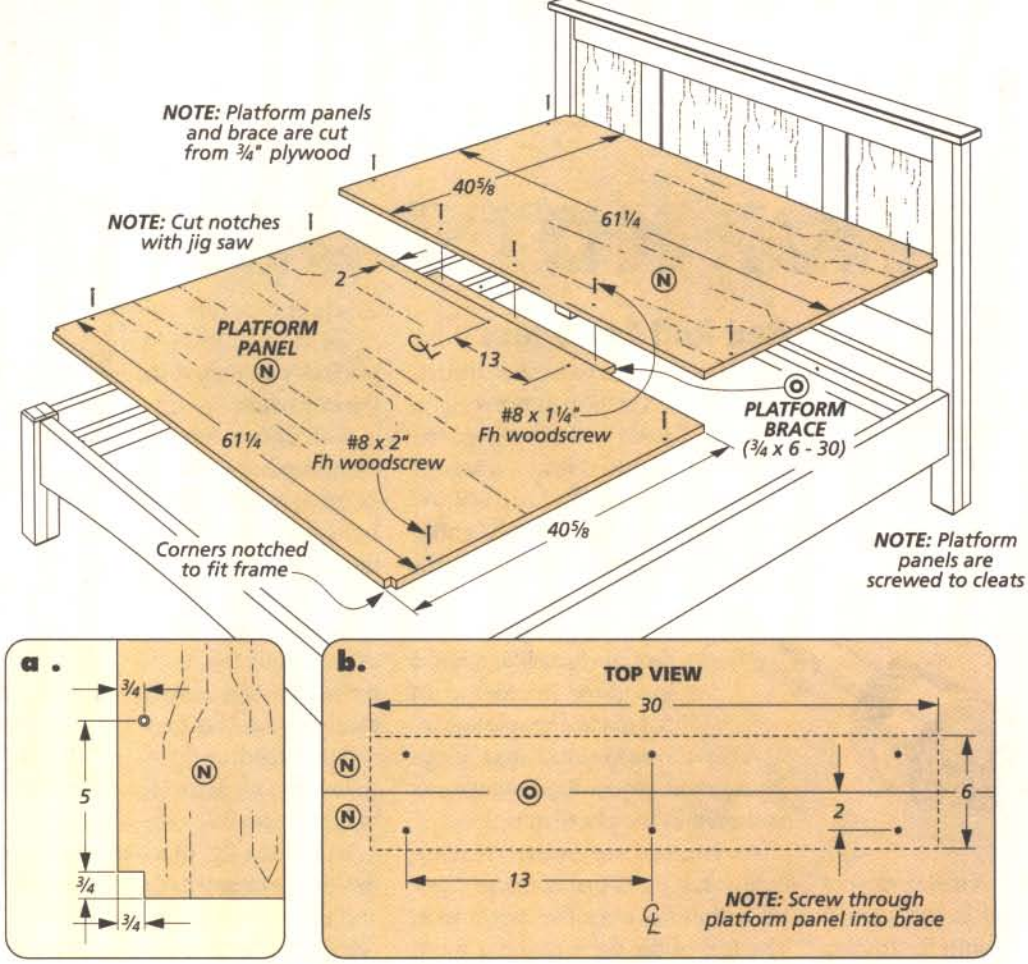

DESIGNER'S NOTEBOOK

A Different Size

Building a wider frame is about the only change you'll need to make for a king-size version. But I do want to mention a couple minor things.

First, when you build the headboard, you'll have more space to fill with the plywood panels. The best way to do this is to leave the two side panels the same size and make the center panel wider.

And then at the tail end of the project, you'll want to add extra support under the platform. All this takes is a centered leg screwed to the platform brace.

A couple final notes. You'll find dimensions for a full-size bed on our website. And check your mattress size before you start work.

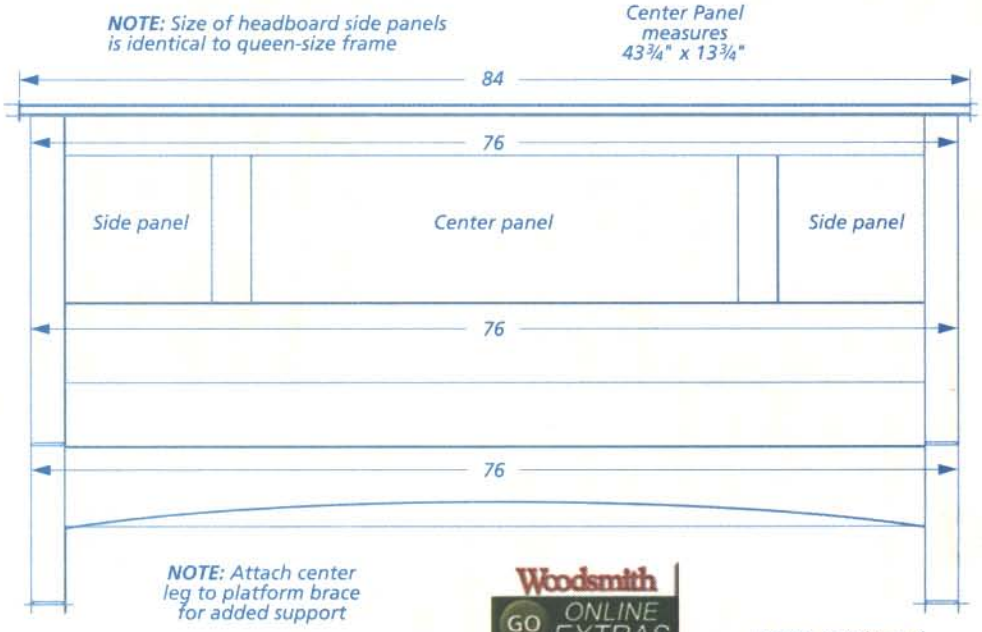

Woodsmith GO ONLINE EXTRAS

To find a materials list and cutting diagram for a king-size or a full-size bed, go to: www.Woodsmith.com

SHOP NOTEBOOK

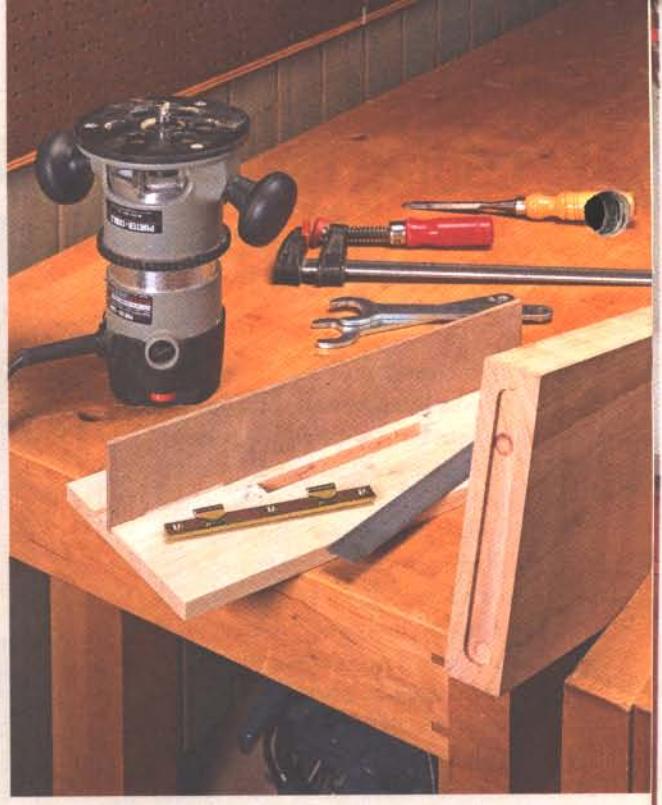

Bed Rail Fasteners

To attach the rails to the headboard and footboard of the platform bed on page 22, I used bed rail fasteners. These are mortised into the legs of the bed as well as the ends of the rails. And since they carry the entire weight of the platform and mattress, you'll want to make sure they fit into the mortises like a hand in a glove. In order to do this, I made a simple jig that allowed me to quickly rout snug-fitting mortises for the fasteners, as is shown in the photo at right.

▲ This dado clean-out bit is the perfect length for routing the shallow mortises for the bed rail fasteners. See page 49 for sources.

As you can see in the drawing below, the jig is just a router template that fits over the workpiece. The top of the jig is nothing more than a piece of ½"-thick hardwood with a slot in the center to match the size of the bed rail fasteners.

But instead of trying to cut the slot in the center of the top, I glued up the top out of four separate pieces, using one of the rail fasteners as a spacer to make sure the slot was perfectly matched to the hardware.

FENCE. The underside of the top has a couple of grooves cut in it to hold a hardboard fence. This way, you can move the fence from one groove to the other to cut the mortises on the legs as well as those in the bed rails. I sized both of these grooves for a *tight*, friction fit.

To use the jig, place the fence in the groove closest to the slot opening and then clamp the jig to the end of one of the bed rails, as you can see in Fig. 1. Using a ½" dado clean-out bit (see inset photo at left) rout a shallow mortise in the end of the rail. The bearing on the bit follows the slot in the jig, creating a perfectly sized mortise. (You can use one of the rail fasteners as a gauge to check the depth of the mortise.)

After routing the mortises on the bed rails, you can move the fence to the outer groove of the jig and repeat the mortising procedure on the legs of the bed (Figs. 2 and 2a).

Once all the mortises have been routed, the next step is to square up the ends of each mortise with a chisel (Fig. 2b). Then you just have a few little minor details to take care of before screwing the rail fasteners in place. (See page 28 for more.)

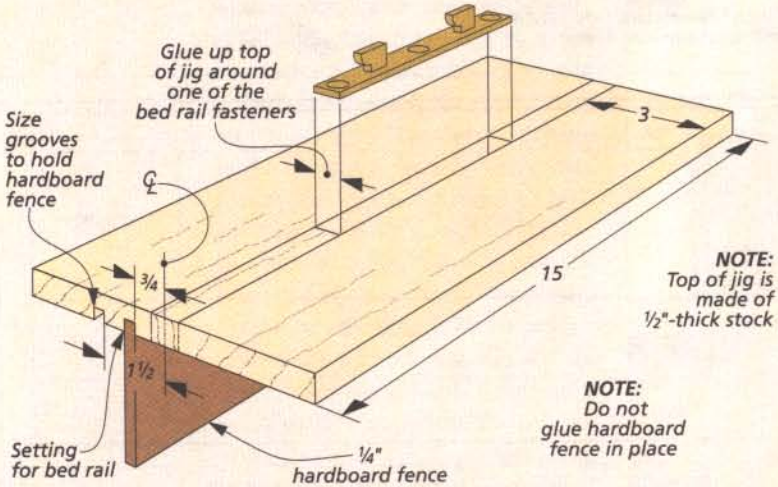

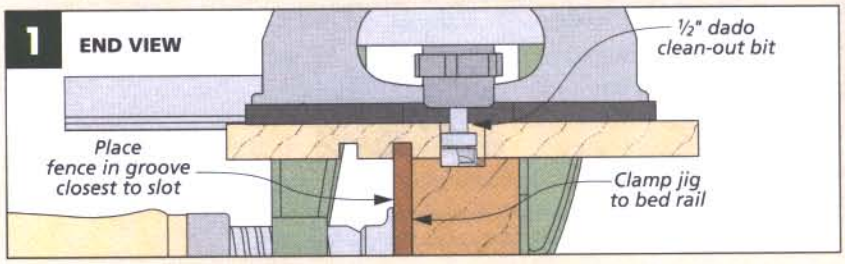

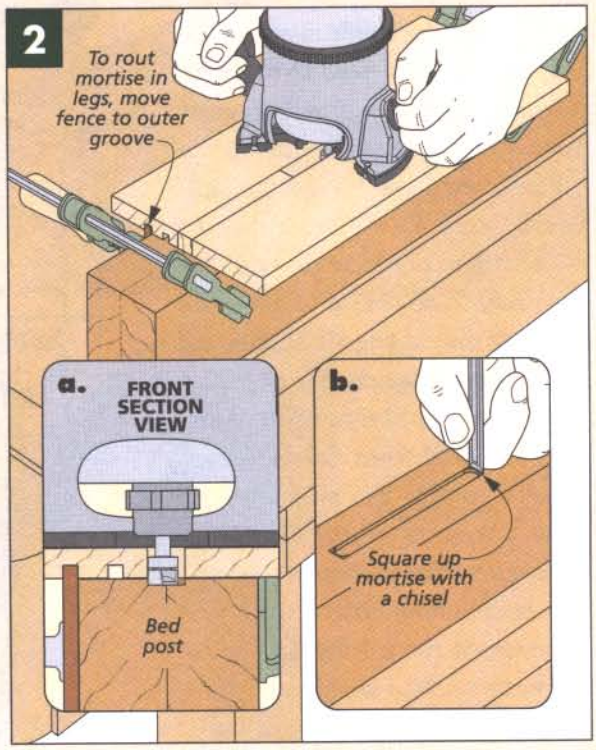

Stacking DVD Cases

If you decide to make more than one of the DVD storage cases on page 16, you'll probably want to be able to stack the cases on top of each other. To connect the cases but still allow them to be taken apart later for a different configuration, I installed machine screws and matching threaded inserts (see photo at right).

DRILLING THE HOLES. If you take a look at details 'a' and 'b' below, you'll see that countersunk holes are drilled in the bottom of the upper case for the machine screws. Then larger holes are drilled in the top of the case below for the inserts.

The trick is to make sure that the insert holes in the lower case line up perfectly with the screw holes in the upper case. To do this, I set up a fence and a stop block on my drill press, and used this setup to drill all the holes, see drawing below. (You'll have to flip the workpiece over to drill all the holes.)

Once all the holes are drilled, you can install the inserts. The inserts I used are threaded on the inside only — to match the threads of the machine screws. The outside of each insert is covered with little barbs. As the insert is driven into its hole, the barbs dig into the wood and prevent the insert from being pulled out.

INSTALLING THE INSERTS. My first instinct was to hammer the inserts into the holes. But I quickly realized that this might damage the workpiece (or the insert). So instead, I decided to *press* each insert into its hole.

The answer was a simple C-clamp. I first threaded a machine screw into each insert to act as a driving ram. Then I used the C-clamp to gently press the inserts into the holes, as you see in the drawing in the upper left. A backer board placed behind the workpiece will prevent the head of the C-clamp from marring the wood.

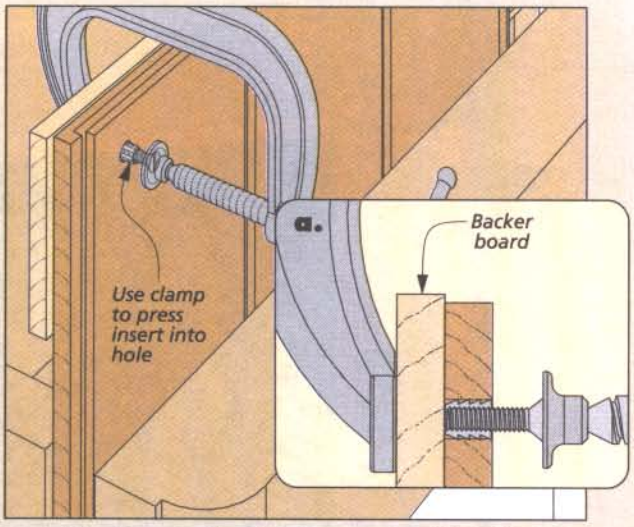

Installing Inserts. *The inserts are pressed into the holes using a C-clamp and a machine screw. A backer board prevents the clamp head from marring the workpiece.*

Barbs on ► the outside of these inserts prevent them from being pulled out of their holes once they're installed.

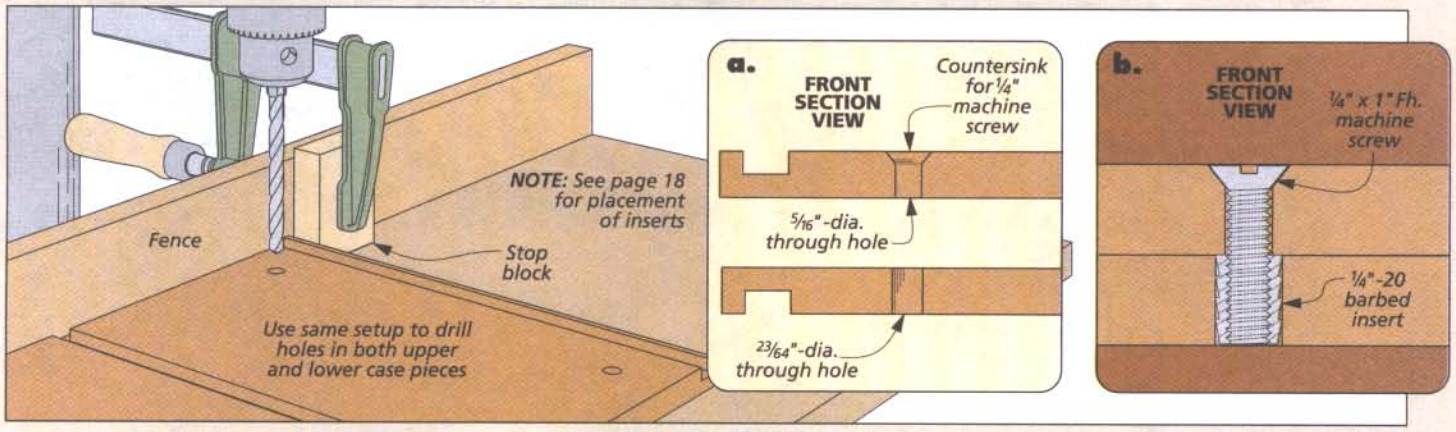

Headboard Cap

When it came to installing the cap on the headboard of the bed, I used dowels to keep the pieces aligned and create a stronger joint. I just had to make sure sure the holes in the top of the legs lined up with the holes in the bottom of the cap.

To do this, I used dowel centers. I drilled the holes in the legs first. Then I placed a dowel center in each hole and centered the cap on the headboard. By pressing down on the cap, the dowel centers made "dimples" in the bottom of the cap, letting me know exactly where to drill the matching holes.

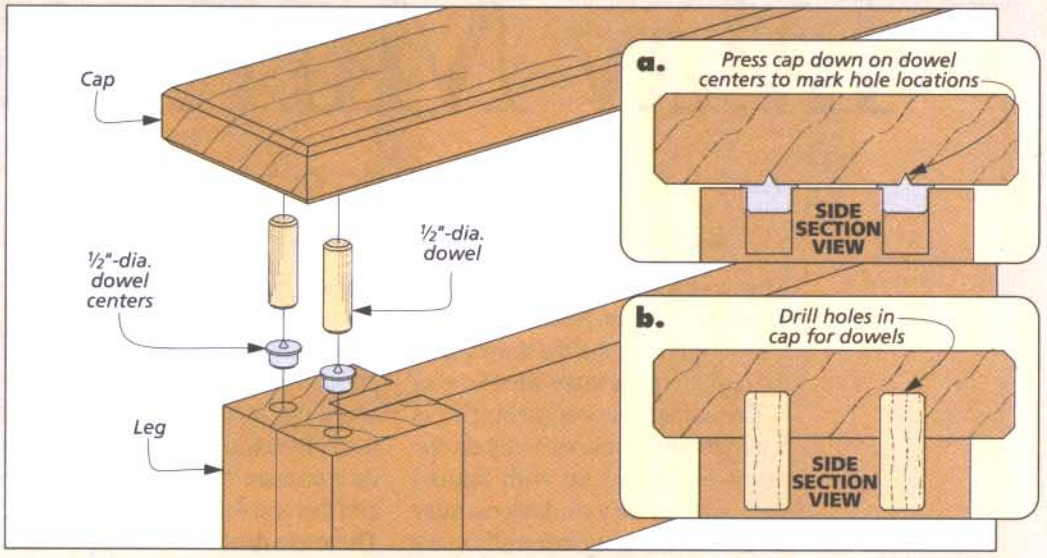

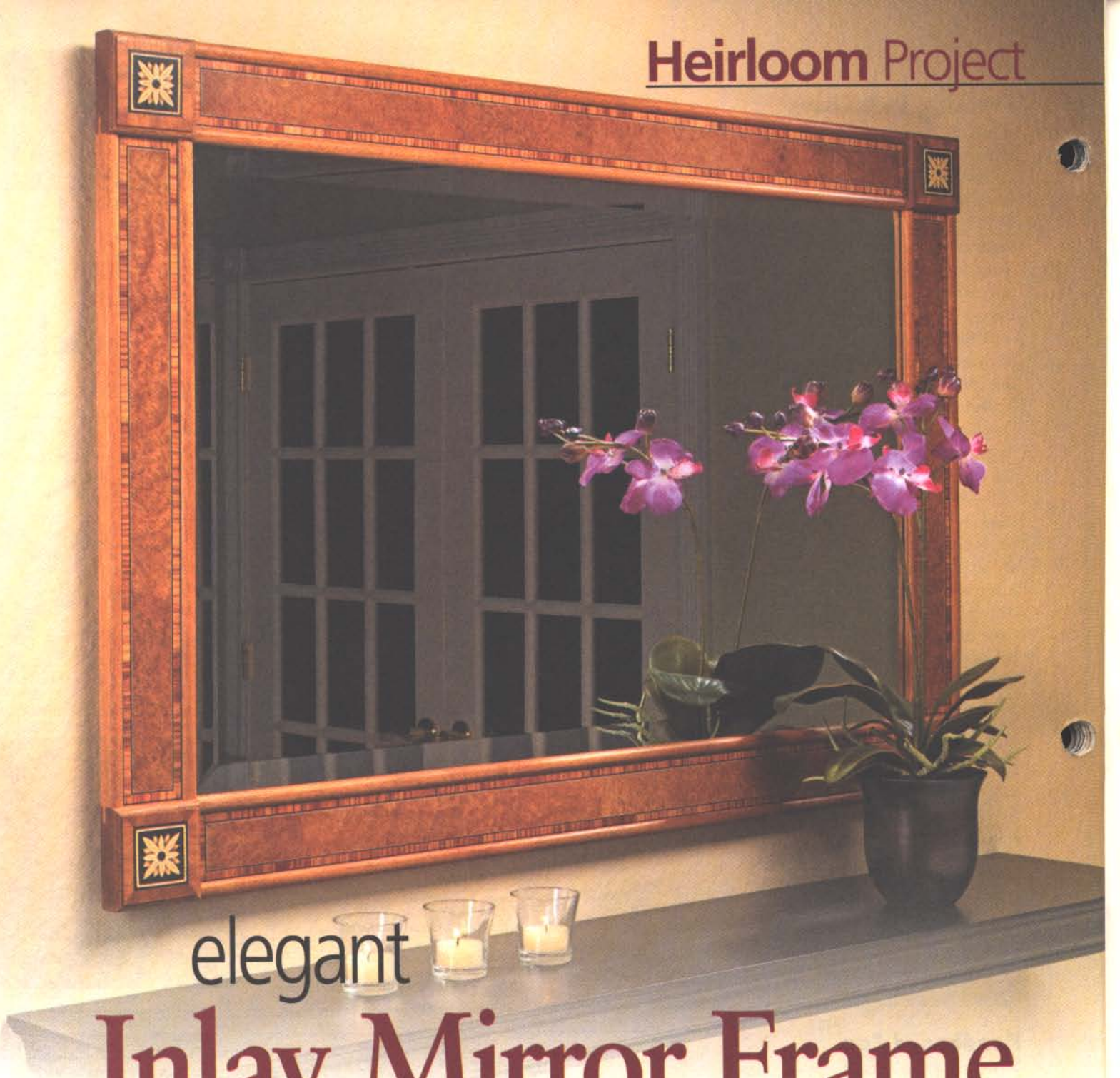

elegant Inlay Mirror Frame

Take a frame from basic to outstanding with a few small pieces of veneer and pre-made inlays and marquetry patterns.

Icing on the cake — that's what this project is all about. Just take a look at the photo above and the drawing on the opposite page to see what I mean.

The frame joinery is just butt joints reinforced with splines. But then, the frame is dressed up with figured veneer, marquetry medallions, inlay strips, and stringing that really make it stand out from the crowd. While this may sound complicated, it's not.

The inlay and marquetry pieces are pre-made from different species of wood that are sliced thin, dyed, and then glued together. All you have to do is arrange them on the workpiece and then cut them to suit your needs. There are dozens of inlay patterns, veneer choices, and marquetry medallions available. For a couple of other ideas, take a look at page 39 or the sources on page 49.

With this frame, I'll show you the techniques and give you the information you'll need to successfully work with these pieces on this project or any other you'd like to build.

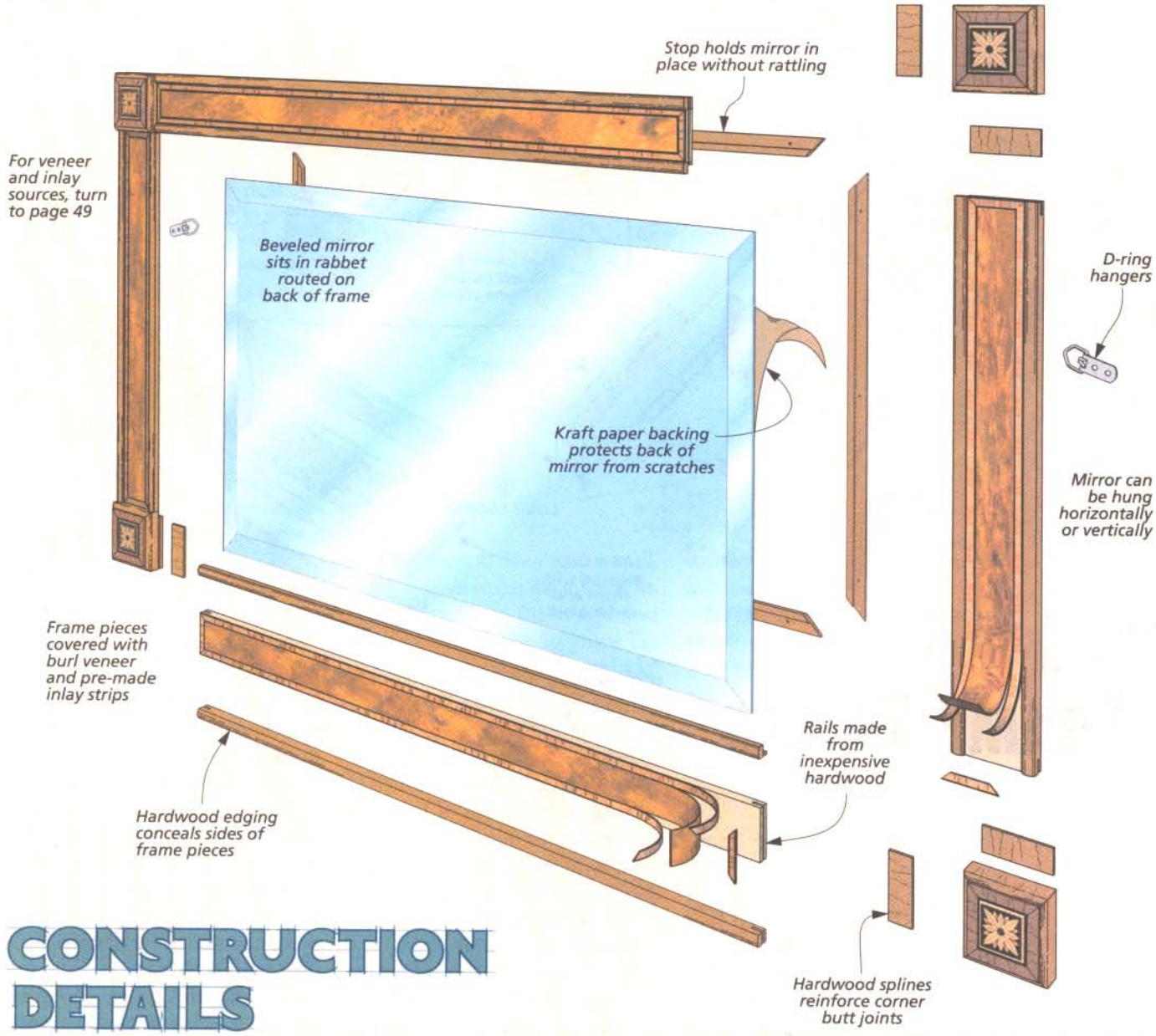

CONSTRUCTION DETAILS

OVERALL DIMENSIONS: 41½"W x 1 5/16"D x 27½"H

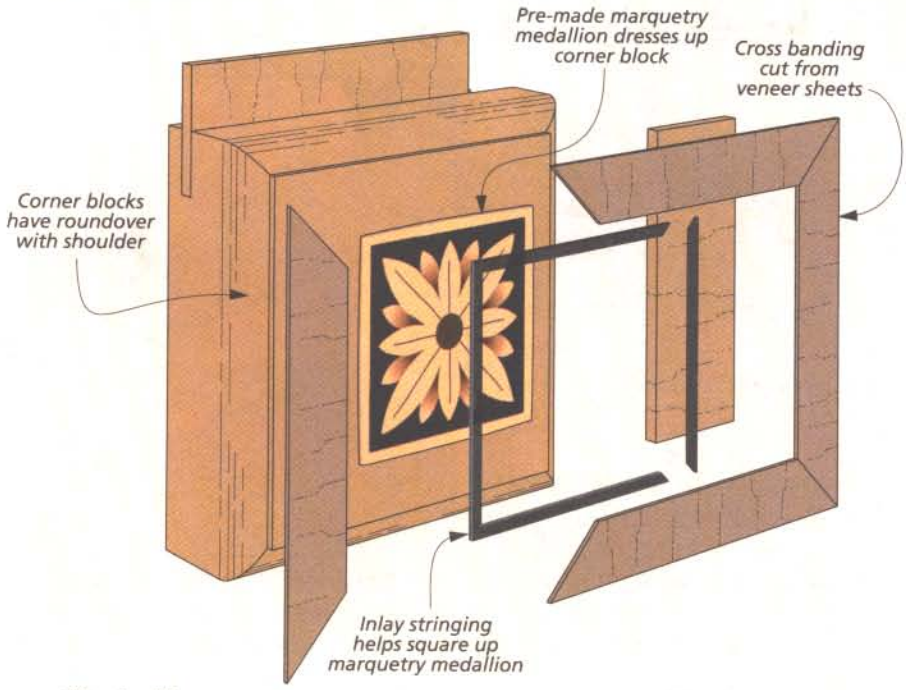

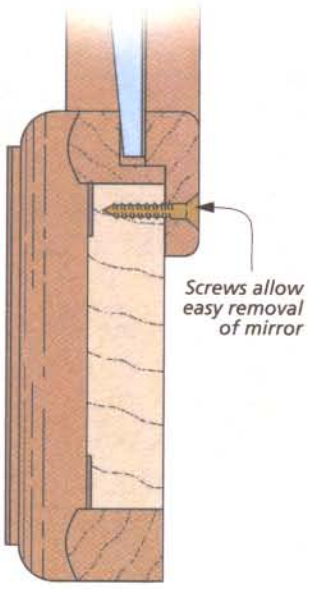

SIDE SECTION VIEW

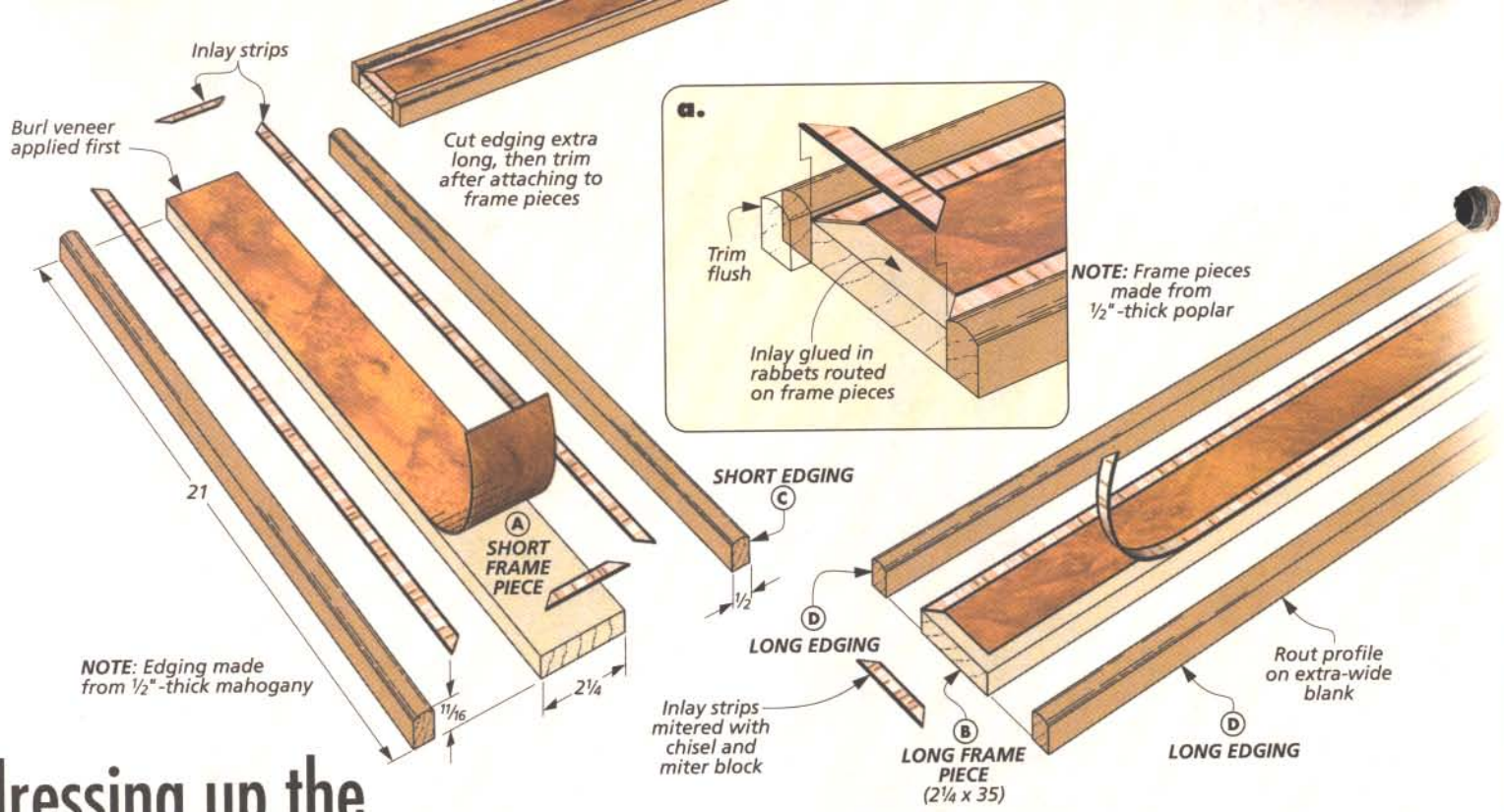

dressing up the FRAME PIECES

I began building with the frame pieces. You can make them any length you want. For the rectangular frame shown here, I used two short pieces and two long ones.

In the drawing above, you can see that veneer, inlay strips, and some edge molding are added to complete the frame pieces. The box along the bottom of the page gives a good overview of the steps in the process.

FRAME PIECES. There isn't much to making the frame pieces, but there are a couple of things to point out. First, since the pieces aren't visible once the frame is assembled, I used an inexpensive wood — poplar.

Second, for the frame joinery to end up square, you'll want to take care to cut all the matching parts to the same, exact length. A stop block set up on the miter gauge will give you consistent results, as shown in the box on the bottom of the page.

Once the pieces are sized, you're ready to start adding some detail. I started in the center of the frame pieces and worked my way out.

VENEER FIRST. The first thing to do is apply a strip of veneer to the top of the frame piece. I used Carpathian elm burl veneer, but any fancy veneer will work. When gluing the

How-To: Applying Veneer, Inlay, and Edging

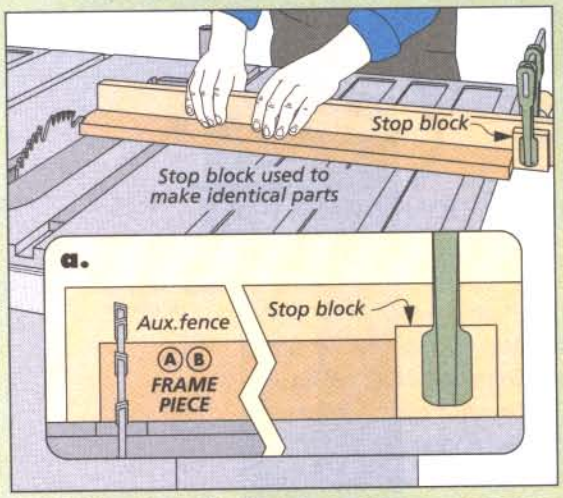

Cut Rails to Length. *To end up with a square assembly, the frame pieces need to be cut precisely. A stop block on the miter gauge makes this a snap.*

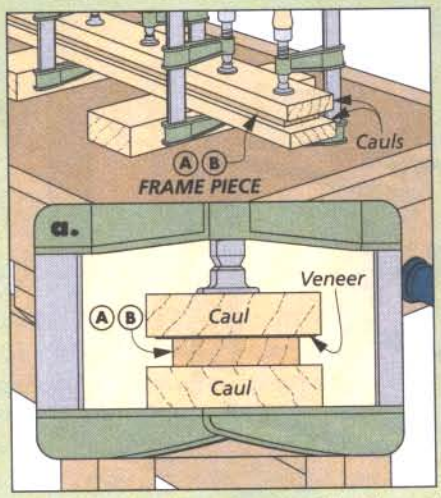

Gluing the Veneer. *A set of hardwood cauls and plenty of clamps provides the pressure needed for a flat veneer bond.*

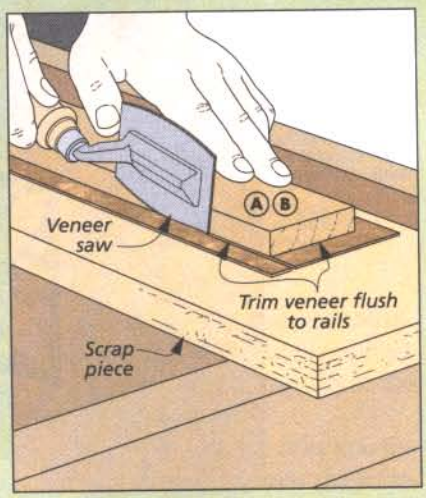

Trim Veneer Flush. *After the glue dries, use a veneer saw to trim the veneer flush with the edges of the frame pieces.*

veneer down, you want the veneer as flat as possible (no bubbles or lumps). To do that, I used a pair of cauls and plenty of clamps.

I usually use yellow glue to attach veneer, but here I used veneer glue. It's thicker than ordinary glue and contains ground pecan shells to help prevent the glue from bleeding through the veneer and affecting the finish later on. To find out where to get it, turn to page 49.

INLAY STRIPS. To set off the veneer, it's framed with a mitered inlay strip. Usually, this kind of strip is set in flush with the surface of the wood. And that's easy to do on this frame with a simple rabbet.

I took the workpiece over to the router table for this step. Using a straight bit to rout the rabbet makes it easy to get a perfectly smooth, flat-bottomed surface for the inlay to rest in. A few test cuts will help you get everything set just right.

After routing the rabbet, the inlay can then be cut and glued in place. As simple as that sounds, there's a little more to gluing them in place. First of all, the inlay strips are pretty brittle. You have to handle them gently to avoid snapping them apart.

MITERING TO FIT. Another thing to consider is the technique for mitering them to fit around the rail. I used a chisel to cut the inlay to fit. A saw would be too rough and could tear the inlay. To guide the chisel I made a simple "miter block" (drawing above). The block has a 45° miter cut on one end that guides the chisel. A pair of grooves cut in the block are sized to hold the inlay strips and cross banding.

When it comes to fitting the inlay, I needed a way to position the first piece accurately. To do this, I used a short piece of inlay to serve as a guide. Hold the guide piece in place along one of the short edges of the rail. Then butt a long piece in place, registering it against both the veneer and the guide piece.

GLUING THE INLAY. It's almost impossible to clamp the inlay — so I didn't even try. Instead, I just used my fingers to hold down short sections (about 6") while the glue set up.

EDGING. To protect the edges of the frame pieces, I added some mahogany edging. The edging is pretty straightforward. It has a bull nose profile routed on the top edge. The box below shows how it's made. Finally, the edging can be glued on. The edging is left extra long. This way, you can trim it perfectly flush with the ends of the frame pieces.

Shop Tip: Veneer Miter Block

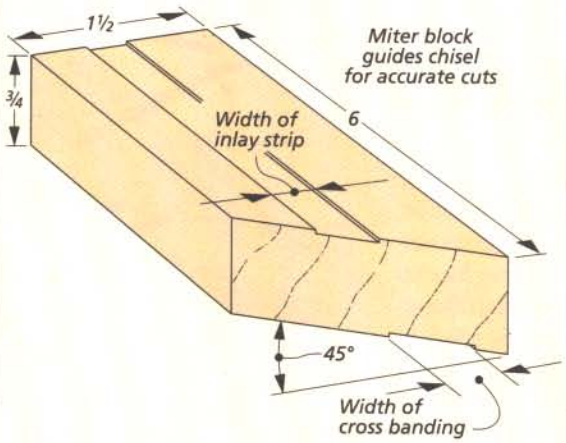

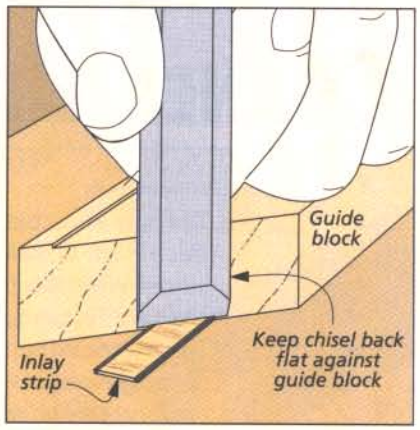

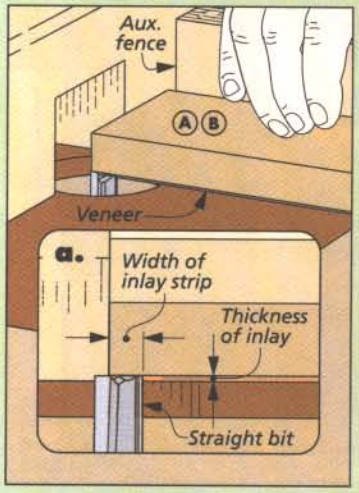

Routing for Inlay. *A straight bit in the router table makes a flat-bottom rabbet for the inlay.*

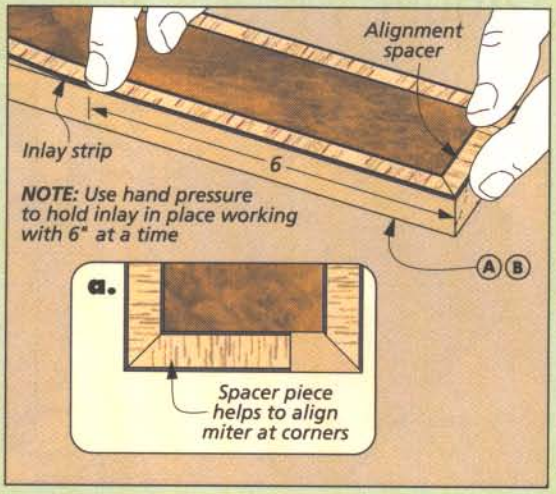

Applying Inlay. *A mitered spacer makes it easy to position the first strip of inlay. On the long edges, apply glue to short sections and use finger pressure.*

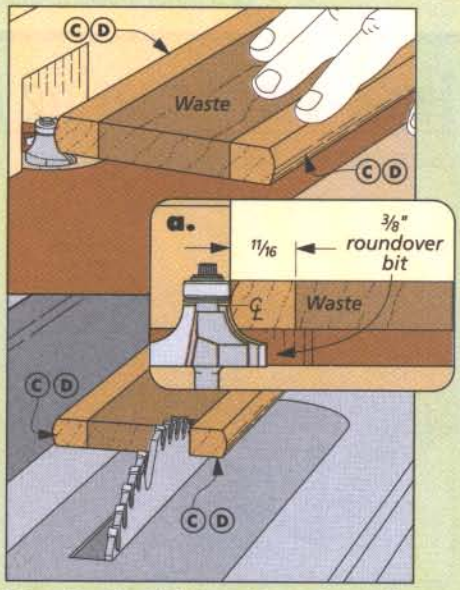

Shaping the Edgings. *Rout the profile of the edge molding on an extra-wide blank. Then rip to width.*

complete the frame with CORNER BLOCKS

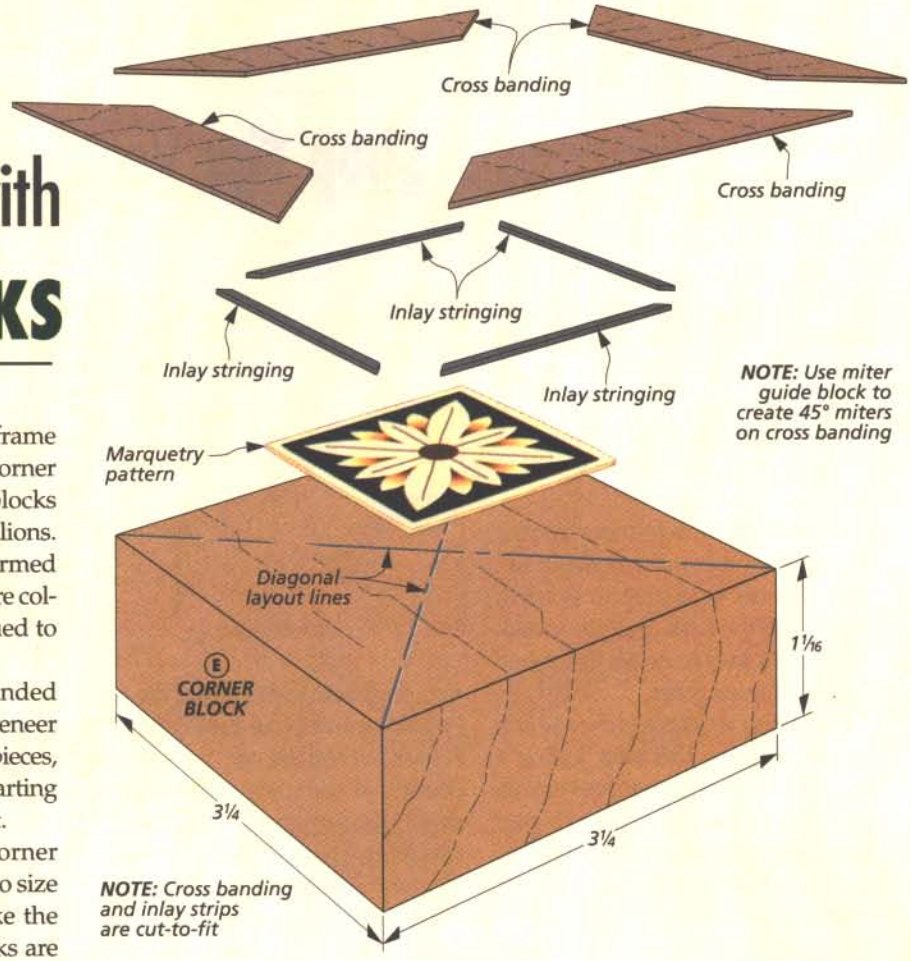

The only other pieces of the frame that are left to make are the corner blocks. What sets the corner blocks apart are the marquetry medallions. These intricate patterns are formed by many pieces of wood that are colored, cut to size, and then glued to a wax paper backing.

The medallions are surrounded by a thin inlay stringing and veneer cross banding. Like the frame pieces, I made the corner blocks by starting in the center and working out.

THE BLOCKS. Making the corner blocks starts by cutting them to size from $1\frac{1}{16}$"-thick stock. Unlike the frame pieces, the corner blocks are visible, so I cut these from mahogany. Once the blocks are sized, you're almost ready to start adding the details. But before you do, it helps to draw diagonal layout lines on the top of the corner block. The lines will make it easier to position all the pieces on each block.

MEDALLIONS. Like I said before, the first piece to add is the square marquetry medallion. The medallions I used weren't exactly square. So I came up with a technique that makes it appear square once it's complete (box below).

When gluing the medallion down, you'll need to "eyeball" it to get it roughly centered. I glued it with the paper backing up. It can be easily sanded or scraped off later.

INLAY STRINGING. To help square up the look of the medallion, a thin black inlay stringing is wrapped around it. And rather than butt these strips tightly to the medallion, I glued them on as square as possible. While this leaves some tiny gaps around the border of the medallion, the dark color of the inlay strip will mask them (detail below).

How-To: Squaring Marquetry Medallion

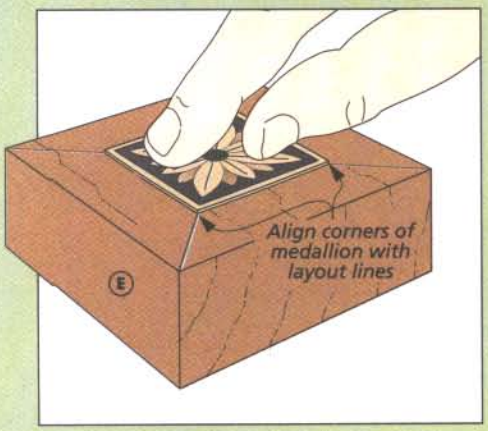

Placing Medallion. *Use diagonal layout lines to roughly center the marquetry medallion on the corner block.*

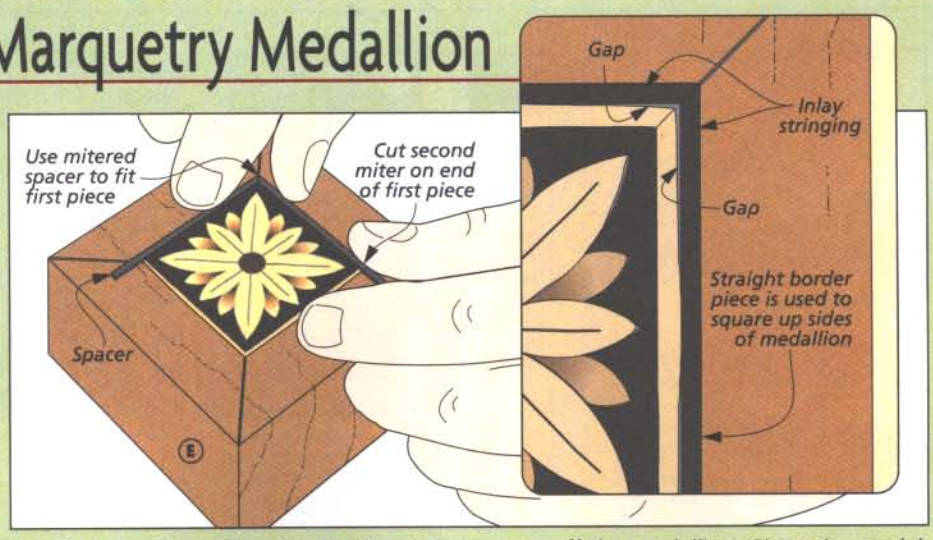

Apply Inlay Stringing. *Black inlay stringing sets off the medallion. Since the medallions may not be square, don't glue the stringing tight against the medallion. Instead, use the inlay to help square up the pattern. The tiny gaps won't be visible.*

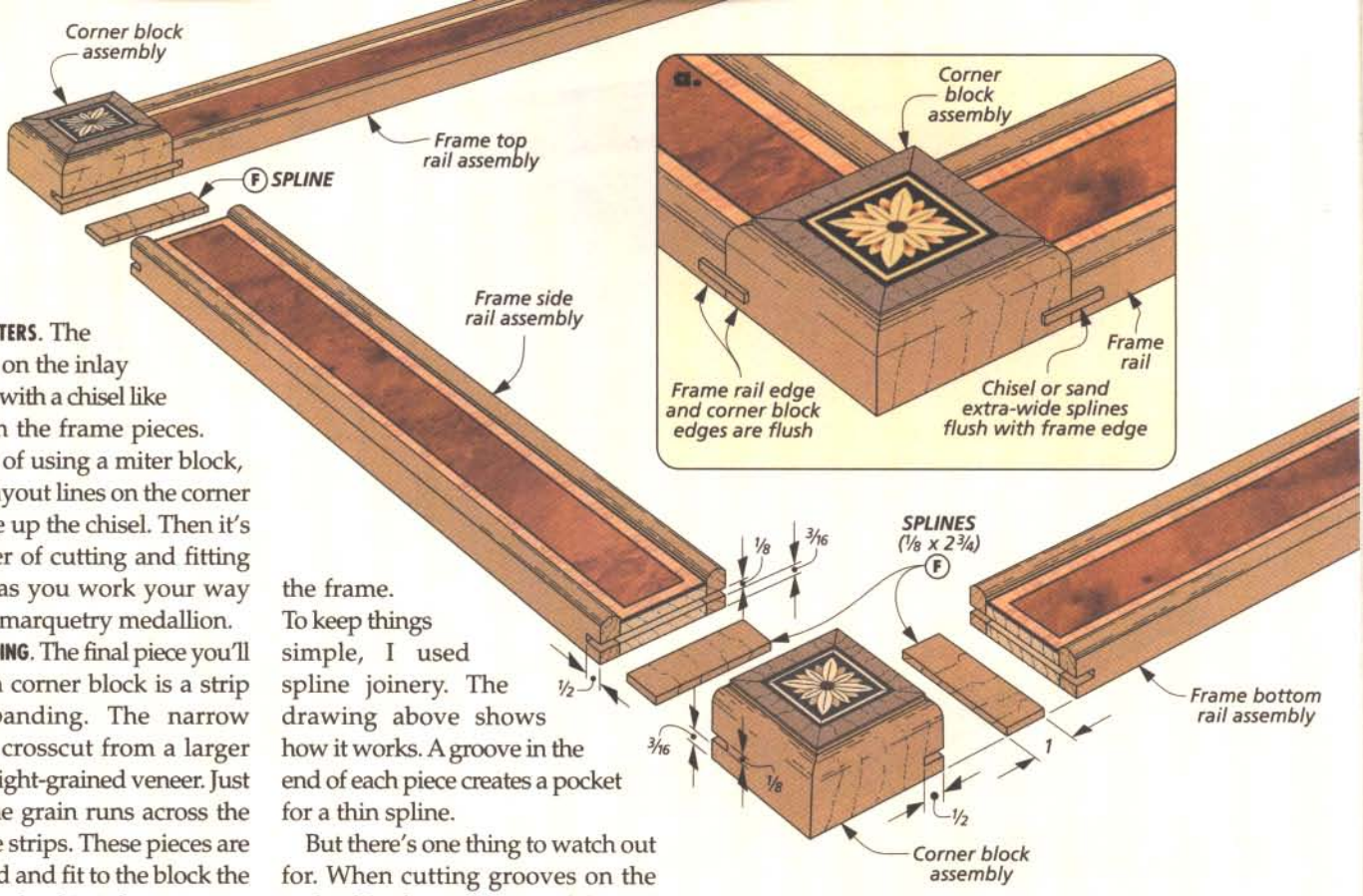

CUTTING MITERS. The miter joints on the inlay strip are cut with a chisel like the inlay on the frame pieces. But instead of using a miter block, I used the layout lines on the corner block to line up the chisel. Then it's just a matter of cutting and fitting each piece as you work your way around the marquetry medallion.

CROSS BANDING. The final piece you'll add to each corner block is a strip of cross banding. The narrow banding is crosscut from a larger sheet of straight-grained veneer. Just note that the grain runs across the width of the strips. These pieces are then mitered and fit to the block the same way as the thin inlay stringing that was just applied.

There's just one last thing to do before moving on to the joinery. And that's to rout a roundover on all four edges of the corner block. When setting up for this detail, I created a slight (3/32") shoulder so the cross banding strip really stands out.

SPLINE JOINERY. With all the details of the frame taken care of, you're ready to connect the eight parts (four frame pieces and four corner blocks) into the frame. To keep things simple, I used spline joinery. The drawing above shows how it works. A groove in the end of each piece creates a pocket for a thin spline.

But there's one thing to watch out for. When cutting grooves on the ends of the frame pieces and the end grain of the corner blocks, it's a good idea to back up the workpiece to prevent tearout (box below).

Once the grooves are routed, you can make the splines. Note: The grain direction runs across the joint line. I cut the splines extra-wide and trimmed them flush after the glue dried. This way I didn't have to worry about keeping the splines aligned while the frame was assembled, as in detail 'a' above.

ASSEMBLING THE FRAME. Speaking of assembling the frame, I found that one way to make the process a little less hectic is to do it in two stages. Start by gluing up the ends of the frame first. In my case, I glued a short frame piece to two corner blocks. The second stage of the process is to connect these two assemblies together with splines and the remaining two frame pieces.

Completing the Corner Block

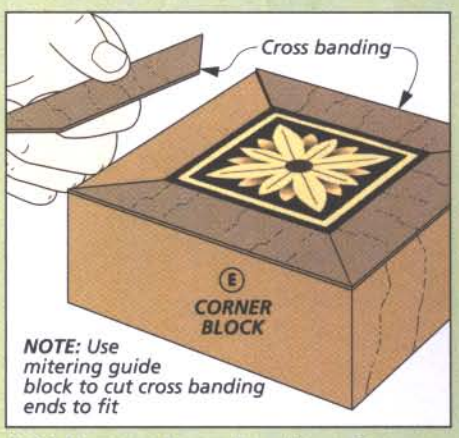

Add Veneer Cross Banding. *Cut cross banding strips from a sheet of straight-grained veneer. Note grain direction.*

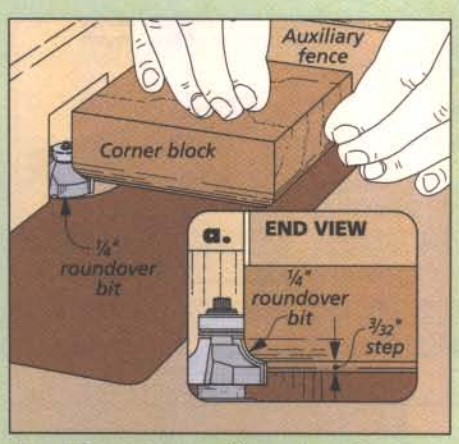

Rout Roundover. *After trimming cross-banding, rout a slight, shouldered roundover on all four edges.*

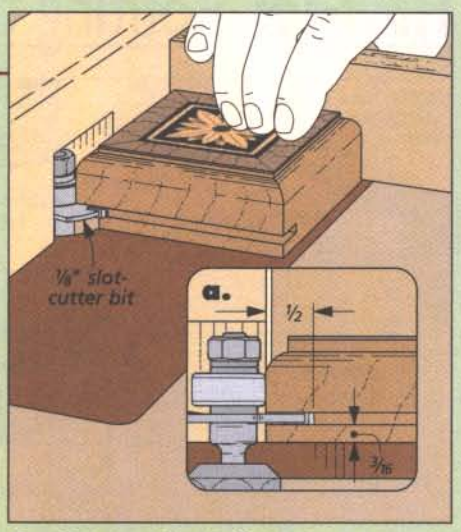

Cut Grooves for Splines. *Rout a groove in two sides of each corner block and the ends of the frame pieces to hold a spline.*

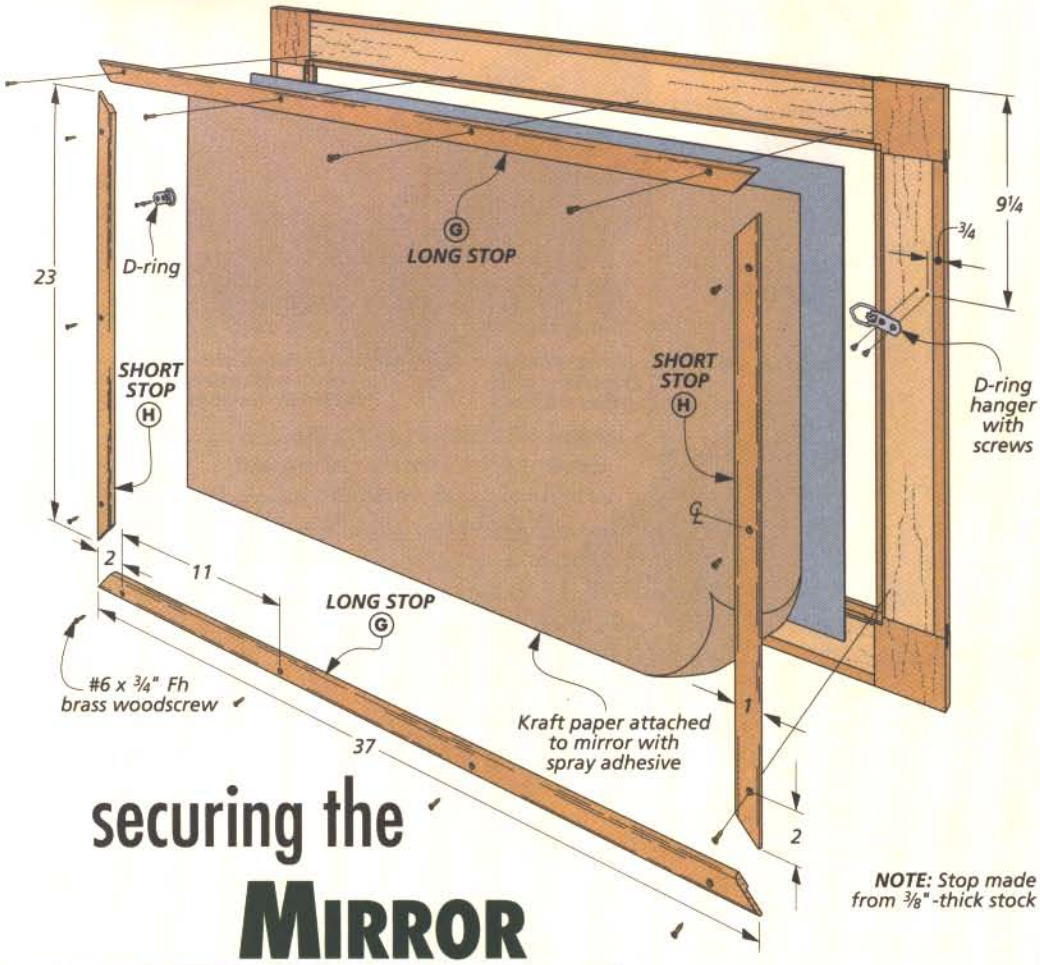

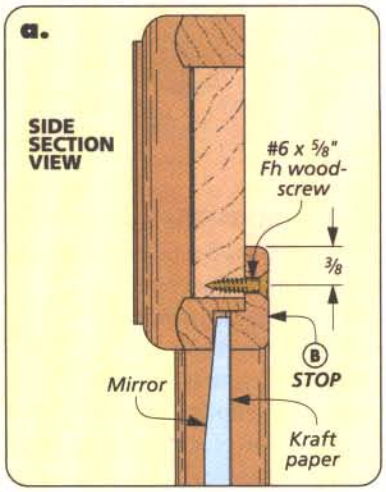

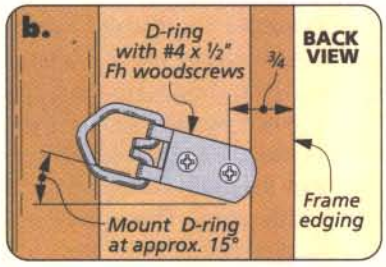

securing the MIRROR

At this stage of the game, the frame is pretty well complete. There are just a few things left to do to fit the mirror in place.

ROUTING A RABBET. The first thing to do is to rout a rabbet in the back face of the frame to hold the mirror. Since the frame is already assembled, this is not the time for any problems like tearout. To avoid this, I routed the rabbet in three passes, as you can see in the box below.

The first pass is a light, skim cut with the bit set for the full-depth of the rabbet. I backrouted this cut to prevent chipout on the edge. The second pass is routed clockwise against the bearing but the bit is a little shy of the full depth. And the final pass is a clean-up cut. The bit is set at full depth to skim off the waste and complete the rabbet.

Now, the large router bit can't get into the corners of the frame. So you'll need to go back and square them up with a chisel. I used a pretty wide chisel here to help keep the

How-To: Routing the Rabbet for the Mirror

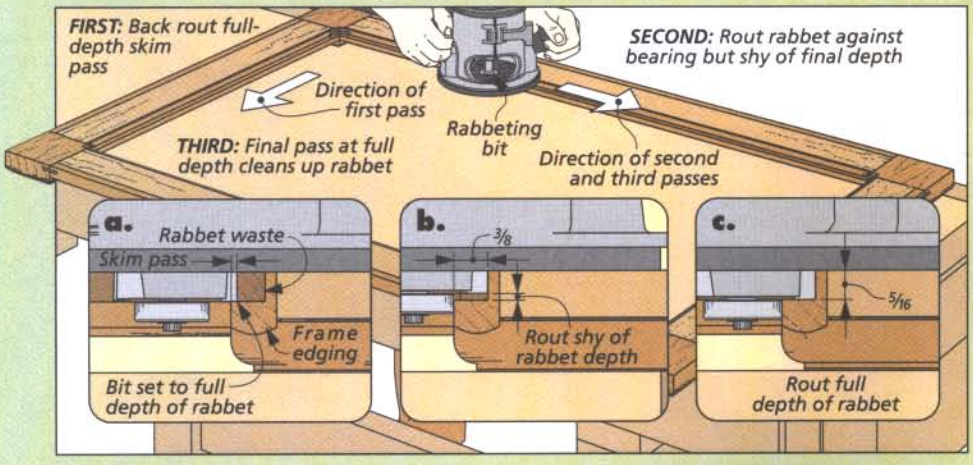

Routing the Rabbet. *To prevent tearout, the rabbet that holds the mirror is routed in three steps. The first pass establishes the shoulder of the rabbet at full depth. The second removes most of the waste. And the final pass cleans up the bottom of the rabbet.*

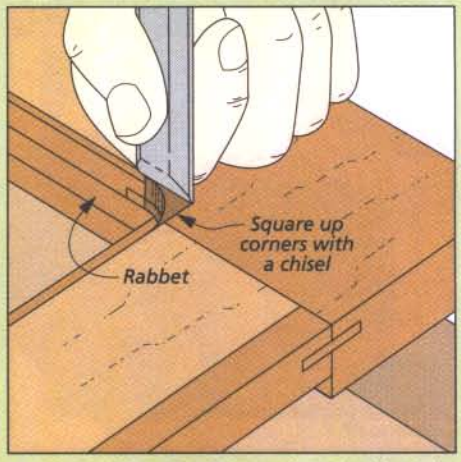

Squaring Up the Corners. *Since the rabbeting bit can't reach into the corners, you'll need to clean them up with a chisel.*

corner as flat as possible and flush with the rabbet.

MIRROR STOP. To hold the mirror in place, I made some hardwood mirror stop, like you see in the drawing on the opposite page. The stop has a wide, shallow rabbet routed in it. It's sized to hold the mirror and backing snugly in place. (I applied kraft paper to the back of the mirror to keep it from getting scratched.) But cutting a rabbet on a thin, narrow piece can be tricky.

The way to make it simpler is illustrated in the three-step process shown in the drawings at right. I started by routing a rabbet along each edge of an extra-wide blank on the router table, as in Fig. 1. A couple of test cuts on a short piece let you test the fit of the rabbet. Then I flipped the blank over and ripped the stop to width on the table saw. A featherboard attached to the fence will keep the workpiece from fluttering during the cut, as in Fig. 2.

The final step is to round over the edges back on the router table (Fig. 3). The stop can then be screwed down. Finally, I attached a pair of D-ring hangers and some wire to mount the mirror to the wall. W

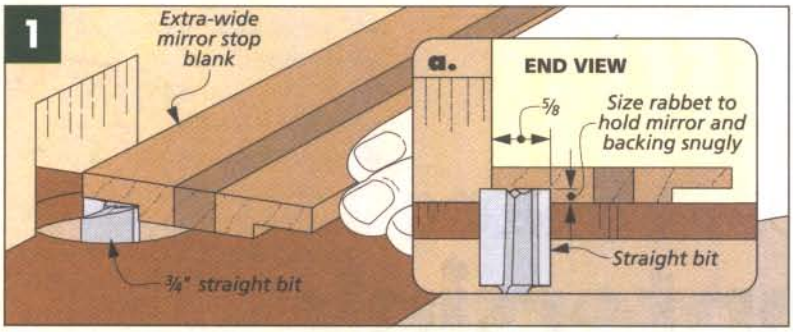

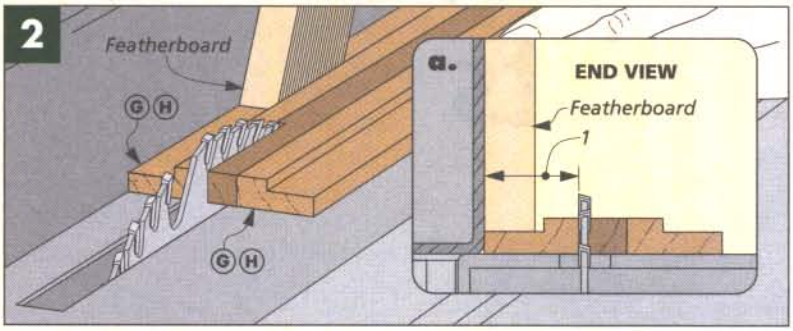

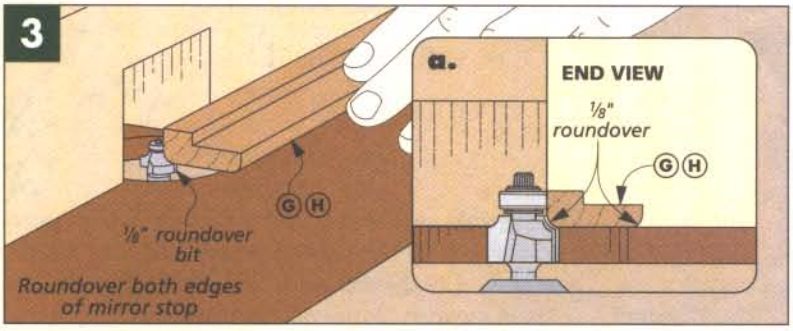

DESIGNER'S NOTEBOOK

Corner Options

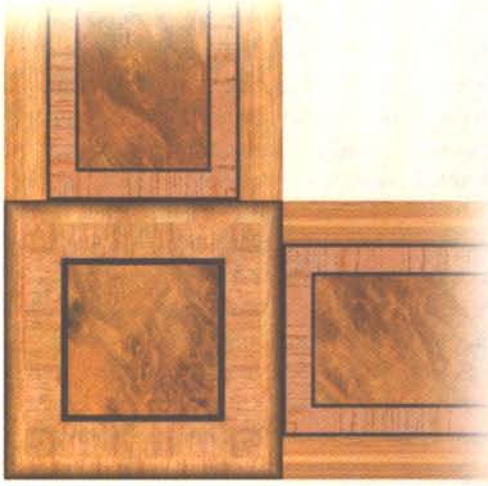

There are literally hundreds of possible combinations of veneer and inlay strips to customize your own project. And a good way to see them is to take a look at the possibilities available from the source on page 49.

In the drawings here, you can see how just a simple change can really transform the look of the frame. In the left one, I replaced the marquetry medallion with a piece of the veneer used on the frame pieces. On the right, I went with mitered corners.

choosing & using **Countersink Bits**

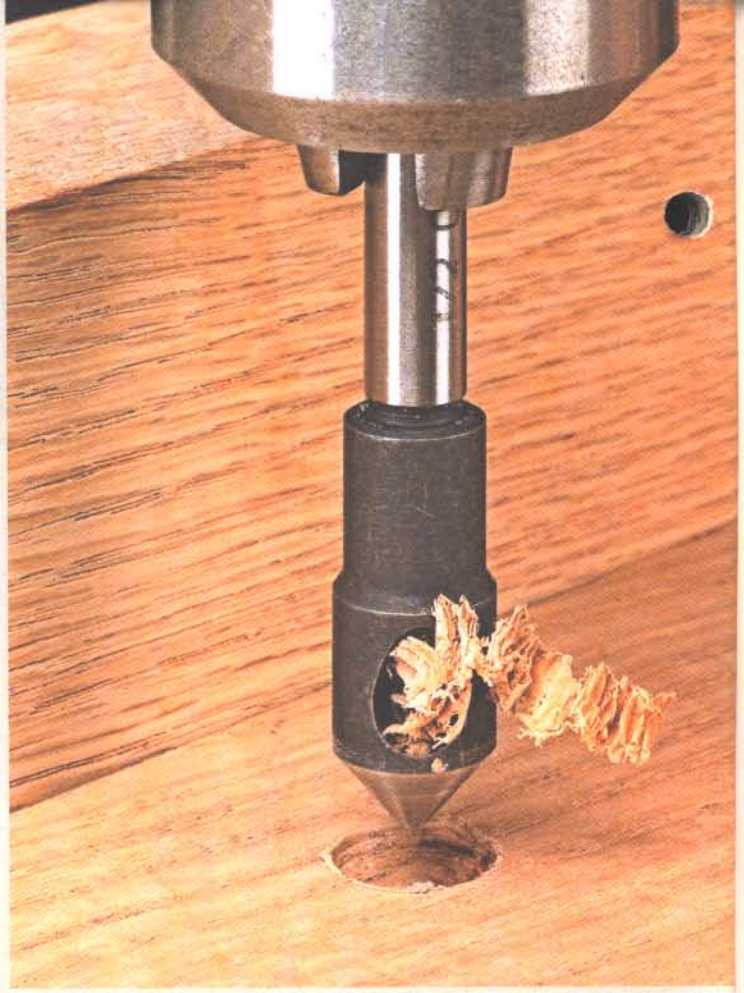

Small details make a difference. Give your project a professional look with perfect countersinks.

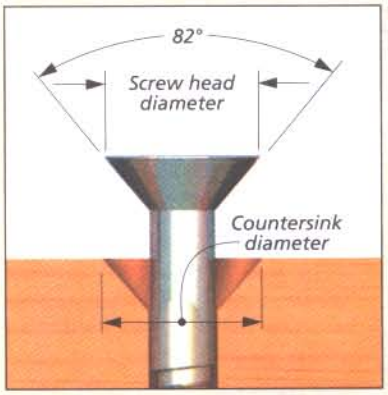

Screw Head Position. *For the screw head to seat properly, the angle and diameter of the countersink must match that of the screw head.*

Piloted bits have a center pilot to maintain proper hole alignment.

▲ Non-piloted bits have no center pilot and require the drilling of a pilot hole first.

Countersinks are one of those small details that can really change the look of a project. And it's easy to overlook the importance of doing it right.

There are many types of countersinks that will cut a cone-shaped opening at the top of a screw hole. But when it comes to making countersinks that look consistently good and seat the screw head correctly, using the right bit makes a big difference.

So, how do you know if you have the right bit for the job? Well, several things need to be considered before answering that question.

COUNTERSINK SIZE. First, you'll want to make sure the head of the screw fits into the countersink so it sits flush with the surface of the wood (or slightly below). That means using a countersink that's at least as large as the head diameter of the screw. With some types of countersinks, you'll need to adjust the size of the opening by setting the drill press depth or controlling your hand drill. Other types require you to choose a countersink size that's specific to the size of the screw you'll be using.

Another important consideration is the angle of the countersink bit (see illustration at left). For the screw to seat correctly, the angle of the countersink bit must be the same as the angle of the screw head.

An angle of 82° is the one you'll find most often. But I've come across some hinges that are manufactured in Europe in which the angle around the holes that attach the hinge measure 90°. So to get the screw to seat properly in these hinges, you'll need to redrill the hole with an 82° countersink.

PILOTED AND NON-PILOTED. It's also important to determine how you'll be drilling the countersink. That's because some countersink bits will require drilling a pilot hole first while other bits don't need a pilot hole.

A lot of countersinks are nothing more than a large bit with a tapered point at the end, like you see in the bottom photo at left. They require a pilot hole to center the bit so it is able to cut equally on all sides of the hole.

A great advantage to this type of bit is that it can be used for a wide range of screw sizes. By simply increasing or decreasing the drilling depth of the bit, the diameter of the countersink can be made larger or smaller.

You'll also find countersink bits available with a center pilot at the end, like you see in the top photo at left. They allow you to quickly countersink in wood and dress or resize holes in hardware. These bits generally come in diameters that correspond to screw sizes.

Size and angle are important. But it's the cutting flutes that really determine the kind of hole you end up with. The type of cutting edge and the number of cutting surfaces on the

countersink greatly affects the results you get when you use it.

SINGLE FLUTE. This type is easily recognized by its single cutting edge or flute (see photo top right). The flute "reams" out small chips as the bit turns. They cut slowly and work best when countersinking in nonferrous metals, plastics, and wood.

These bits are usually a little less expensive and commonly found at most hardware stores and home improvement centers. They do an adequate job but tend to vibrate or chatter as they cut leaving a scalloped surface around the hole.

The 82° single-fluted countersink (photo top right) that I got from *Lee Valley* I really like. It costs a little more but it cuts a nice smooth countersink. It's large diameter makes it ideal for chamfering the edges of large bench dog holes as well.

MULTI-FLUTED. This countersink works a lot like the single flute bit. But instead of one flute it uses a number of flutes to scrape away the material (see middle photo at right).

Since it has more flutes it's able to remove more material during each rotation of the bit. This means it cuts faster with less chatter. These bits generally cut smoother and cleaner than the single flute types, especially when drilling in metal.

But one of the biggest advantages to this type is that they last longer. Since the cutting load is distributed over more cutting edges, multiple flutes increase the life of the bit. This is a real plus if you're drilling a lot of countersinks in metal.

I find the three-fluted countersinks work well for cutting soft metals like aluminum, brass or bronze. But when it comes to countersinking in harder metals, you'll usually want to go to one having six flutes.

ZERO-FLUTED. This countersink is the one I use most often. It doesn't use flutes for cutting like other countersink bits. Instead it uses the edge of a single hole through the middle of the bit as the cutting edge, like you see in the bottom right photo. This edge slices away the material as it rotates.

The single cutter produces a continuous curly shaving, like you see in the top photo on the opposite page, rather than making a lot of small chips. Because it has this type of cutter, there's less vibration and chatter. So it leaves a clean, smooth hole. And it works equally well in both wood and soft metals.

If you use this type of countersink bit, you'll probably want to have several different sizes on hand. That's because each countersink bit is sized specifically for the size of screw you'll be countersinking.

One last type of countersink is one that lets you make bit length and countersink depth adjustments. They eliminate bit changes and can really speed up the process. You can learn more about these bits and how they work in the box below. W

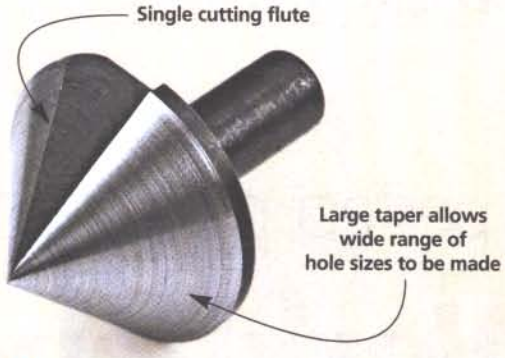

▲ **Single-Fluted.** A single cutting edge or flute removes material as the bit rotates.

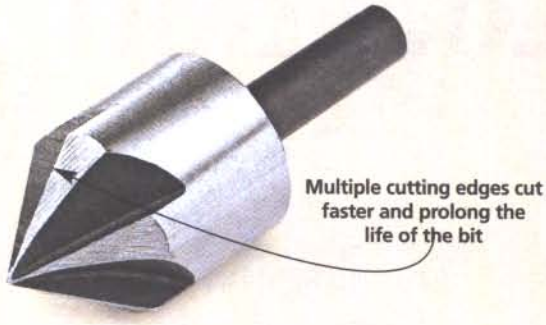

▲ **Multi-Fluted.** Multiple cutting flutes on the bit scrapes away the material.

◄ **Zero-Fluted.** A single hole through the bit acts as the cutting edge.

All-In-One "Adjustable" System

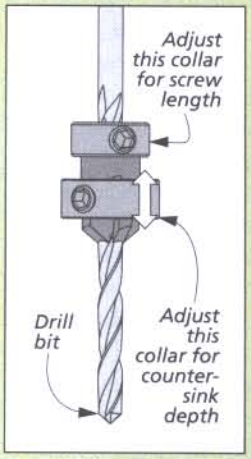

You'll find a number of all-in-one countersink systems available. These offer you the ability to drill, countersink, and counterbore in one quick and easy operation. That way, you don't have to take time to make a lot of bit changes.

The countersink is attached to the body of the drill bit and is usually held in place with a couple of hex-socket screws. This makes it easy to adjust the drill depth so only one countersink and bit is required for many screw lengths. Most of these systems come with tapered bits. But some will allow you to swap out the tapered bits for straight bits for use with many of the newer screw types.

A few systems, like the *Fuller* Type C Countersink you see in the photo at right, allow you to also adjust the depth of the counterbore. An adjustable stop collar around the countersink is used to make this adjustment (illustration at left).

These systems can be a real time saver when you need to countersink a lot of screws or make adjustments for different depths and screw sizes.

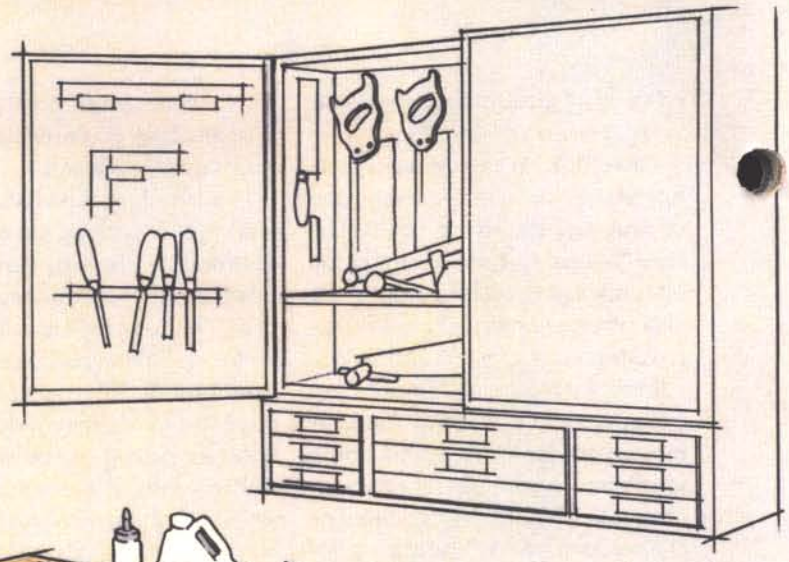

perfect placement

Workbench Location

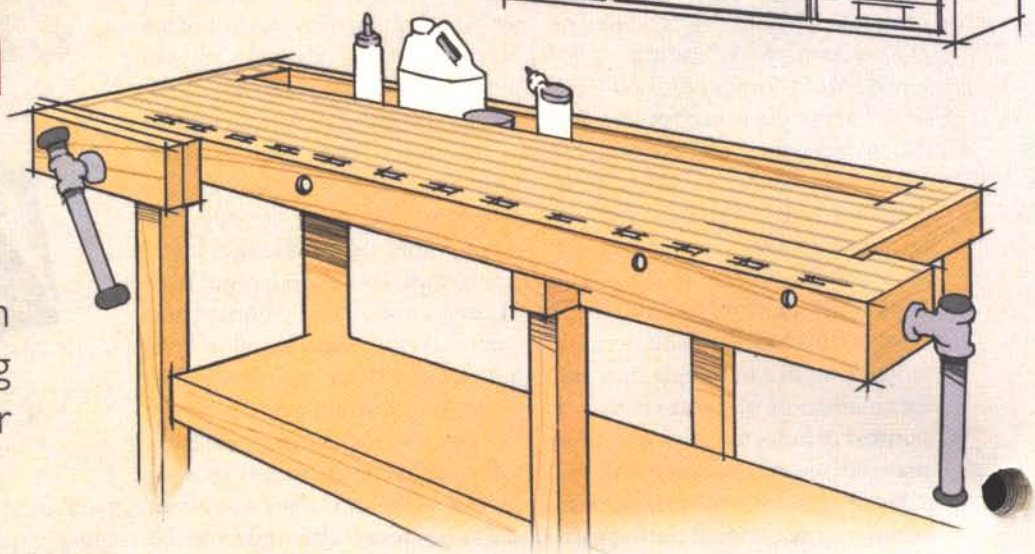

The first step to an efficient shop is choosing the best location for your workbench.

Aside from the table saw, I don't think there's a more important "tool" in my shop than my workbench. Sometimes I use it during each step of construction on a project and other times only for layout or assembly. But it's pretty safe to say that every project that comes out of my shop passes across my workbench at some point. And that's why deciding where to put your workbench is something that deserves a little thought, particularly if you have a small shop.

TWO CHOICES

When you get right down to it, there are really only two choices when it comes to locating a workbench — either against the wall or out in the middle of the shop. Which of these locations you choose has a lot do with the way you use your workbench.

AGAINST THE WALL. For many woodworkers, a workbench serves as a "staging area" for setting out parts while using the table saw or other pieces of shop equipment. For woodworkers like this, accessibility to the workbench may not be as important as having the bench close to your major power tools. If this is the case, you may be able to locate the bench against a wall. Take a look at the sample floor plan drawing at left to get an idea of some of the benefits of locating your workbench against a wall.

FRONT & CENTER. On the other hand, some woodworkers see their workbenches as more than just shop furniture. It's a tool in itself. It can be used to hold a workpiece while sawing, planing, or working on joinery. If you use hand tools regularly or do a lot of hand-cut joinery, you may want to give your workbench a place right in the center of the shop. This way, you can have easy access to the bench from all four sides, which is great advantage when it comes to assembling a project. The sample floor plan on the opposite page shows some of the advantages of this type of layout.

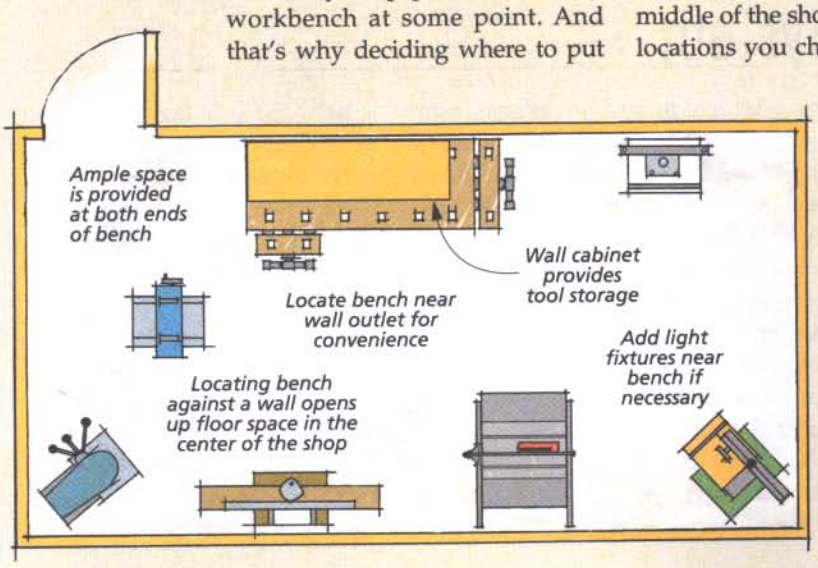

OTHER FACTORS

Regardless of whether you decide to place your bench against a wall or in the middle of the shop, there are some other factors you'll need to consider as well. To get the most out of your workbench, you have to think about things like lighting, electrical outlets, and tool storage.

LIGHTING. Adequate lighting is probably one of the biggest considerations when it comes to choosing where to put your bench. It's hard to beat natural light, which is why I like to locate my bench near a window if possible. If the window is behind the bench or to one side, you don't have to worry about creating shadows across your work.

Of course, if your shop is in a basement, or if you do most of your woodworking in the evening, you'll need artificial lighting. As with natural lighting, you want to make sure that the lights are located so that you don't create shadows across your work as you stand at the bench. This may mean that you'll have to add some additional overhead light fixures or make use of lamps for task lighting.

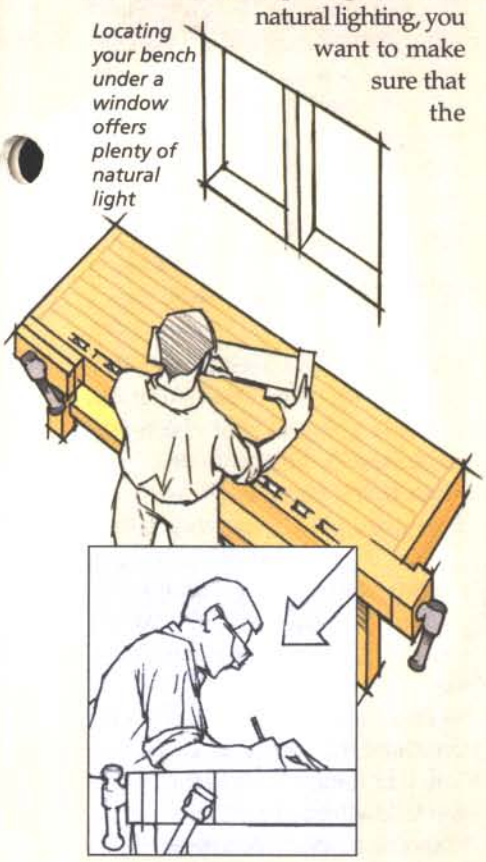

▲ It's hard to beat natural lighting in a shop — if you're lucky enough to have a window. Most of us have to rely on overhead light fixtures. But make sure that you locate the fixtures so that you don't block the light when standing at your bench.

POWER. I do a lot of sanding and routing at my bench, so having a few electrical outlets handy is important. If you're choosing a place along the wall for your bench, you can make life a lot easier if you select a spot near an outlet. This way, you won't have to walk across the shop every time you want to plug in a tool.

If you plan on locating your bench in the middle of the shop, finding a spot near an outlet is more of a problem. Unless you want to do some rewiring, you will probably have to rely on extension cords. These can be suspended overhead to keep them out of the way.

TOOL STORAGE. Unless your bench has built-in storage in the base, another major factor when selecting a bench location is where to keep your tools. A common arrangement in many shops is to position the workbench against a wall and then mount a tool cabinet on the wall right above the bench. This is convenient because all your tools are within easy reach. But the downside is that the tool cabinet can get in the way. And if you have a deep workbench (over 24"), it can be a stretch to reach a hanging tool cabinet.

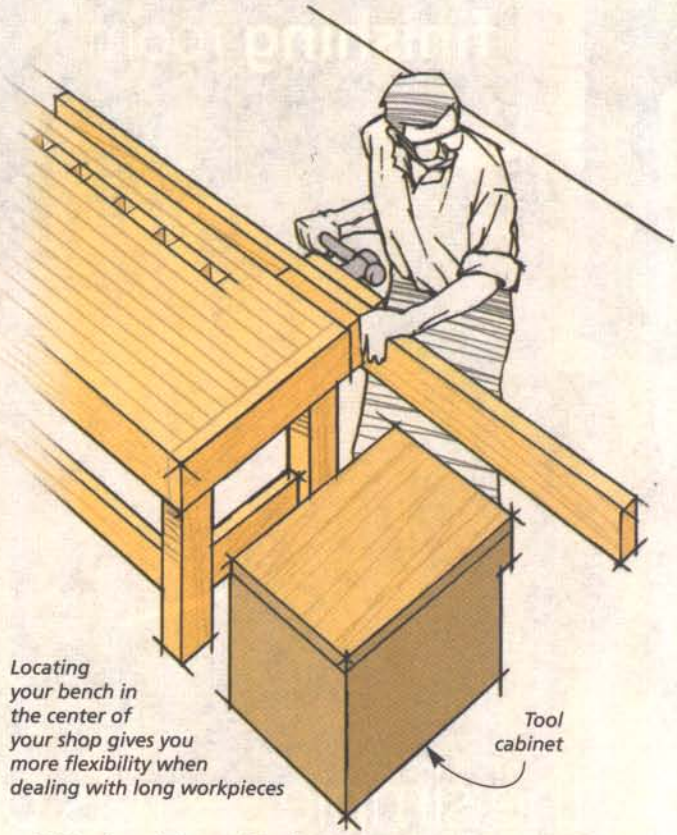

With a bench located in the center of the shop, your tool storage options are even more limited. You can store tools in a wall cabinet, or you can build a short tool cabinet to place next to your bench.

Although choosing a location for your workbench is one of the most important decisions you'll make when setting up your shop, the good news is that it's not a permanent one. If the first location doesn't work out, you can always rearrange things and try a different spot. W

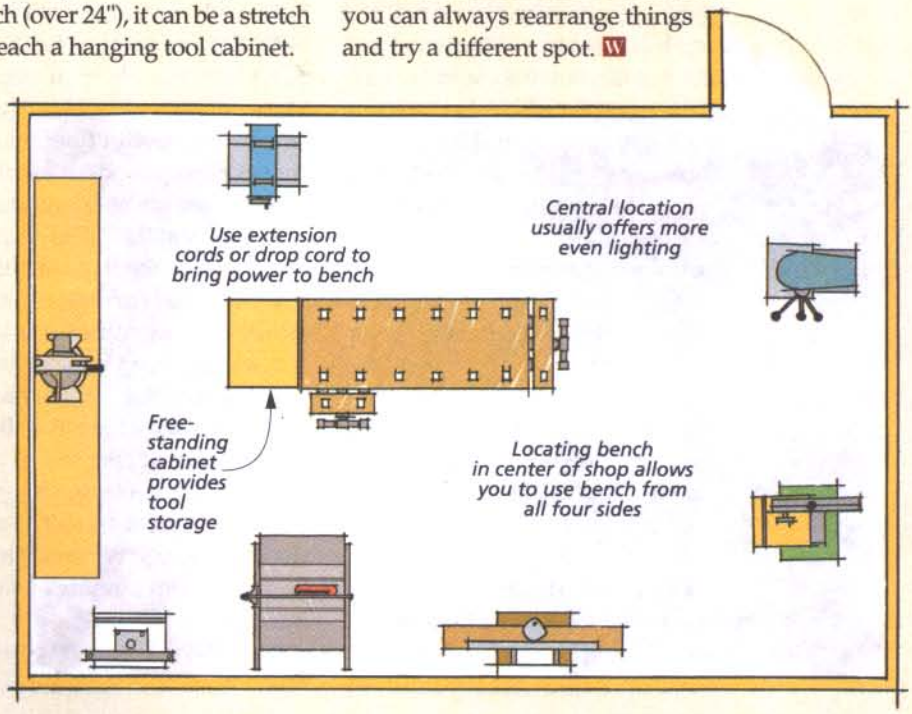

the simple secrets of a

High-Gloss Finish

A hand-rubbed, high-gloss finish can make a project look like a million bucks. And best of all, it's easy if you know the right techniques.

There's nothing quite like the look of a polished, high-gloss finish on the right project. It brings out all the depth and beauty of the wood and lets it shine. It's like you're looking at the wood through a sheet of glass.

I'll admit right off the bat that a rubbed-out, high-gloss finish isn't one that I use often. But on a special project — a tabletop, a small box, maybe a mirror frame it can make the ordinary, extraordinary.

Sure, a high-gloss finish is going to take more time and effort than most other finishes. But there's really nothing difficult or tricky about the process. The key is simply to relax, take your time, and follow the steps. The results are almost guaranteed.

A QUICK LOOK. The mirror-like sheen you're shooting for is the result of a multi-step process. First, you build up a thick film of finish by brushing on multiple coats — as many as eight. This thick layer of finish is then sanded until it's perfectly flat and smooth, but without any gloss. Finally, you bring the gloss back by polishing the flattened surface with finer and finer abrasive compounds. It's really just about as simple as it sounds.

GETTING STARTED. The finishing process starts about the same as any other. But here, I'm maybe just a little pickier with my surface preparation. You want to keep in mind that the smoother and flatter the surface you start with, the easier it will be to create a perfectly flat film to polish. So I sand the surface to 220-grit and then I'm careful to soften all the sharp edges and corners. This will keep you from sanding or rubbing through the finish later on.

FIRST STEPS. Once you're satisfied with the surface, there are a couple things you might need to do before you start applying finish. Naturally, if you're going to stain the workpiece, now is the time to do it. Any stain that's compatible with the finish you plan to use will be fine.

And if you're working with an open-pored wood like mahogany or walnut, you may want to take the extra step of applying a paste-type pore filler. This simply allows you to build up a smooth, flat film for polishing with fewer coats of finish. You'll find the details in the box on the following page.

CHOOSE A FINISH. Now before you can start building a finish, you have a decision to make, which type? The two traditional finishes used to create a high gloss look are varnish and lacquer. You can get great results with either, but there are some significant differences that you'll want to know about.

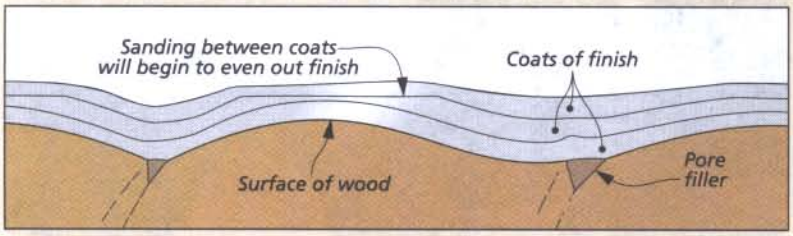

Multiple Coats. *As you apply coat after coat, sanding between each, you build a thick film of finish that gradually lies flatter and flatter on the surface.*

If you read through the box at right, you'll have a good idea of the differences between them. But I want to make special mention of one very important difference.

ONE LAYER. When you apply lacquer, each successive coat "melts" into the one before it. So in the end, you basically have one thick coat of lacquer on which to sand and polish.

MANY COATS. With a varnish, each coat simply lies on top of the previous coat. So sanding between coats is a must to get good adhesion. But a problem with varnish can lie in the final sanding and rubbing. If you rub through the final coat to the one beneath, you'll expose a faint joint line (called a witness line). The solution is to apply a flat film that won't require too much sanding to flatten. And with varnish, this isn't difficult.

I've used both finishes and had great results. In the end, your choice comes down to which type you feel more comfortable with. I think lacquer gets the job done a little quicker, but varnish probably takes a little less work. One last thing. If you choose varnish, buy a good-quality, interior type with a high resin content. The *Behlen* brand shown at right is my first choice (see sources).

A THICK FILM. Building the finish is a pretty straightforward process. Your goal is a film thick enough to sand flat and then polish without fear of rubbing through.

At this point, I just settle into a routine. I carefully brush on a coat of finish, let it dry completely, sand a bit, and apply the next coat. A good-quality brush and good technique will result in a flatter finish and save you work later.

Even with lacquer, I like to sand lightly between coats with 320-grit sandpaper. This flattens the surface a bit after each coat allowing you to judge your progress toward a thick, relatively flat film.

As each coat is applied, the finish will lie smoother and flatter, as shown in the drawing above. But even after the final coat is applied, the finish won't lie perfectly flat.

The trick is to judge when you've built up enough finish. Four or five coats of varnish will usually do the job. With lacquer, you might need seven or eight. After curing for several days, the finish is ready to rub.

Two Good Choices

Before you choose whether to go with lacquer or varnish, it helps to know the pros and cons of each.

I like the fast-drying property of lacquer. This lets you apply as many as three coats in a day. But since it tacks up and dries quickly, it can be tricky to apply without leaving brush marks. And it builds slowly, so you'll have to apply more coats.

On the other hand, a slower-drying varnish flows out and leaves a smoother surface. It builds faster, so fewer coats are necessary. But the slow drying time means one coat a day is the best you can do. And there's more time for dust to settle in the finish.

Lacquer

Pros:
- Dries within a few hours allowing several coats a day.
- Multiple coats create one thick film.

Cons:
- Can be difficult to apply without brush marks.
- Thin coats build slowly.

Varnish

Pros:
- Brushes easily and flows out smoothly.
- Requires fewer coats to build a thick film.

Cons:
- Dries slowly, only one coat a day is possible.
- Dust can be a problem.

Shop Tip: Pore Filler

The mahogany tabletop you see in the large photo at left has thousands of open pores on its surface. This makes applying a nice, flat layer of finish on which to polish a challenge. The wet finish settles into the pores and leaves a "dimpled" look on the surface. The simple answer is to level the surface with a paste-type pore filler before you start applying the finish.

A pore filler comes as a thick paste. The pre-tinted variety reminds me a little bit of a gel stain, only thicker and stiffer. You'll find that it's pretty easy to use, but there are a couple of tricks you need to know.

Pore filler dries fast, so I work small areas. Wipe or brush the filler on, forcing it into the pores (photo at right). Let it sit for only a couple minutes before removing the excess. First, wipe across the grain. Finish up by wiping with the grain. Try to work fast before the filler becomes too stiff. You don't want the filler to "muddy" the surface. I give it a good 24 hours to dry and then apply a thin coat of shellac to seal in the filler.

▲ It looks like a messy job, but you'll find that applying pore filler can really be a big help with some woods. You'll end up with a much flatter finish in less time and save yourself some work.

sand and POLISH

At this point, you've built up a thick, shiny film, but it's not perfect. You'll see brush and lap marks and dust specks. So after allowing the finish to cure for several days, the next step is to sand the film until it's perfectly flat. And when it's flat as glass, you can polish it to a high sheen.

▲ Once you've laid down a thick film of finish, it only takes a small amount of elbow grease to level it. The three ingredients you'll need are wet-or-dry sandpaper, a padded sanding block, and plenty of mineral spirits.

WET SANDING

This sanding process is a little different. Here, you'll use very fine-grit "wet-or-dry" sandpaper found at paint or auto body stores. The sandpaper is wrapped around a padded sanding block and the surface kept well lubricated with mineral spirits (paint thinner) while you sand. The mineral spirits float away the sanding dust to keep the sandpaper clean.

I like to start with 800-grit sandpaper. Just pour a liberal amount of thinner on the surface and start sanding with a circular motion. This "random" motion will get you to a perfectly flat surface quicker.

As you work, the mineral spirits and the sanding dust will mix to create a light slurry (photo above). This shows that you're making progress. It's a messy process, but even so, you want to keep the surface good and wet. On the plus side, you'll be surprised at how fast the fine sandpaper levels the irregular surface.

▼ The main tools for wet sanding to a smooth, flat surface are shown at left. Used with a sanding block, they'll get the job done suprisingly fast.

Sanding near the edges gets my special attention. It's often where the finish is the "roughest" and needs the most work. But you want to take care not to sand through the finish to bare wood. I try to use a light touch and not "drag" the sanding block too far over the edge.

CHECK YOUR PROGRESS. I use both sight and feel to check my progress. When you run your fingers lightly across the surface, you'll feel any unevenness. Then after sanding for a time, I'll wipe the surface clean and look closely for shiny areas. Spots of shiny finish mean your surface isn't quite flat. You want a surface that's completely dull.

TIME TO SWITCH. When I think the surface is 99% flat, I switch to 1200-grit and finally 1500-grit sandpaper and repeat the process. These two steps create finer and finer scratches and reduce the amount of polishing you'll need to do.

By now, most of the leveling work is done, so you can get through these last stages pretty quickly. But you don't want to leave any deep scratches that will take a lot of time to polish out later.

It can be hard to judge when to quit sanding and move on to the polishing. When you think you're close, clean the surface with a soft cloth and take a look. It may sound strange, but what you're shooting for at this point is a perfectly flat surface with a consistent dull sheen and no noticeable scratches.

BRING UP THE GLOSS

So now you've taken the film of finish from uneven and shiny down to dead flat but completely dull. But you can bring it back to a high sheen in two quick polishing steps.

A LITTLE DIFFERENT. This polishing or rubbing process is slightly different from the wet sanding you just

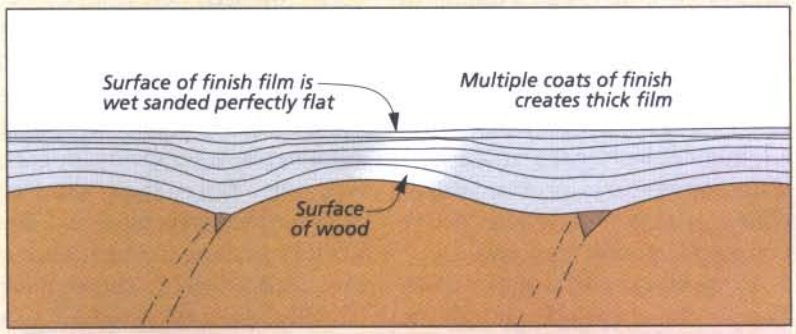

Dead Flat. *The drawing above shows the goal of the wet sanding process. The built-up finish is now perfectly flat and ready to polish to a high gloss.*

completed. Here, you'll use two traditional polishing abrasives — pumice stone and rottenstone — to remove the fine scratches left by the wet sanding. These abrasives (photo below) come in powder form and also need a lubricant to do their job. But instead of mineral spirits, the lubricant you'll use is a rubbing oil, like paraffin or mineral oil. The trick is that as you rub the surface, the abrasive powder and the oil combine to form a paste-like polish. (See page 49 for sources of these finishing supplies).

PUMICE STONE. The polishing begins with pumice stone as the abrasive. This comes in different grades or particle sizes (1F through 4F). But since the surface has already been sanded with 1500-grit sandpaper, you can start polishing with the finest grade — 4F pumice stone.

▲ The two traditional rubbing compounds you'll need to achieve a high gloss finish are 4F pumice stone and rottenstone.

First, pour out a small puddle of lubricating oil on the surface and then sprinkle a small amount of the white pumice powder over it.

Now I pick up a felt block to start rubbing (photo at right). A soft cotton cloth will do the job, but the felt block is easier to hold onto and gives you a large, flat polishing surface.

The key to the polishing is to take your time and be sure to cover the surface thoroughly. The direction of the rubbing doesn't matter, and a moderate amount of pressure is all that's needed. If the paste starts to get too thick and hard to rub out, simply add more oil and a little more pumice.

The polish works pretty fast. What you're looking for at this stage is soft, semi-gloss sheen. When you think you're there, clean an area with a soft cloth to take a look.

ROTTENSTONE. Once the pumice stone has done its job, you're nearing the end. Traditionally, the final step is to bring the surface to a high gloss by polishing with rottenstone. This is an even finer abrasive. (You can check out the box below for one additional step.)

▲ Under the messy paste formed by the oil and the brown rottenstone powder, the finish is taking on its final mirror-like gloss. I put in a little extra time at this stage.

This final polishing step goes exactly like the one you just completed. The rubbing oil and brown rottenstone powder are spread over the surface and "rubbed" into a polishing paste. But before starting, wipe the surface clean of all traces of the pumice stone. And then switch to a clean felt block.

Again, you can rub in any direction, just concentrate on polishing every bit of the surface. And since this is the last step, I try to relax and not rush through it.

It's easy to tell when you've reached the mark. Pick up a fresh cloth and wipe the surface clear for a close inspection. If your gaze is rewarded with a sharp reflection, you're there — you've mastered a hand-rubbed, high-gloss finish. W

Shop Tips: A Brighter Shine

If you want to bring out just a little more gloss on your project, there's an easy way to do it. Stop by an auto body supply store and pick up a bottle of the swirl remover shown at far right. This easy-to-use product is a very fine, synthetic buffing compound used to give an auto paint job that "new car" shine.

You use the swirl remover similar to a paste wax (photo at right). Squirt some on a small area of the surface and rub with a soft cloth. Just polish until the swirl remover starts to dry out. When you clean the surface, you'll find an even brighter shine.

More Shine. *In just a few minutes, you can bring up an even higher gloss. The automotive polish at right and a soft cloth are all you need.*

Questions & Answers

Medium-Density Fiberboard

Q ***I'd like to know more about a material called MDF, which is often mentioned in various projects. Just what is it?***

Robert Landis
St. Marys, Pennsylvania

A MDF, or medium-density fiberboard, is a manufactured wood product that's in the same family as particleboard. But unlike particleboard, which is a mixture of wood chips and shavings held together with resin, MDF is much more refined. The finer the material (see photo at right), the tighter it can be compressed to form a denser, stronger panel.

ADVANTAGES. Breaking down wood into a fibrous material has some advantages. First, it has no grain pattern, so humidity has little effect on MDF, making it extremely stable. Second, the fine fibers result in a very smooth, flat, and uniform surface. This makes it the perfect base for wood veneer and plastic laminate.

Third, its higher density holds an edge better than particleboard (see photo at the bottom). And you won't have problems with voids, like in plywood.

MACHINING. A standard sheet of MDF is 49" x 97" (the extra is for trimming). It's available as thin as 5/32" and as thick as 1 5/8", as in the photo below. It can be worked like any other wood product, including traditional joinery like dovetails and tongue and groove. Because of the glues used in the manufacturing process, MDF will dull steel cutting tools quickly, so carbide cutters and blades are recommended. About the only thing you shouldn't do is run MDF through a thickness planer or over an edge jointer.

Safety Note: Since the fibers are so fine to begin with, working with MDF kicks up a lot of fine dust that can hang in the air for quite a while. When working with MDF, and especially during sanding, proper ventilation is required. Use a dust collector if possible, and always wear a dust mask.

FINISH. You can find MDF unfinished, or with wood veneer or plastic laminate already applied to it.

You'll find that MDF takes paint well. Unlike particleboard or plywood, which the surface texture or grain shows through, MDF looks smooth after a coat of primer and a couple of coats of paint.

Note: Whenever I use MDF for shop jigs , I protect it with a couple of coats of wiping varnish. W

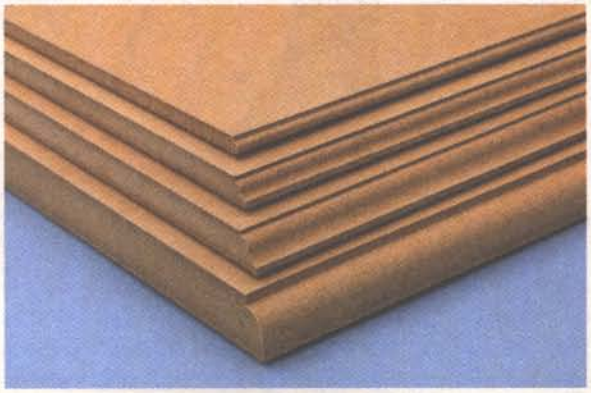

◄ Available in several thicknesses, the dense structure of MDF means that it cuts and routs more like solid wood. Using carbide router bits, you can rout crisp, clean profiles in MDF.

Do you have any questions for us?

If you have a question related to woodworking techniques, tools, finishing, or hardware, we'd like to hear from you.

Just write down your question and mail it to us: Woodsmith, Q&A, 2200 Grand Avenue, Des Moines, Iowa 50312. Or you can email us the question at: woodsmith@woodsmith.com.

Please include your full name, address, and daytime telephone number in case we have questions.

hardware & supplies

Sources

DVD STORAGE CASE

You'll only need a few pieces of hardware to build the DVD storage case on page 16. All of the hardware I used came from *Rockler*.

The brass file drawer pulls with cardholder (#70763) on the front of the drawers added a great look to the storage case. They also make it easy to locate the contents in each of the drawers.

I also added stem bumper glides (#28373) to the top of each drawer. These help the drawer slide as it's opened and closed.

If you plan on making more than one storage case and connecting them together, you'll need a couple of other items. The first is some ¼"-20 standard barbed threaded inserts (#32025). Then to join them together, you need some ¼" x 1" Fh machine screws. You should be able to find these items (or similar hardware) at your local hardware store or home center.

ROUTER BITS

You can find bargain router bit sets at most home centers, local discount stores, and several of the sources listed in the margin. The *Timberline* router bit set featured on page 8 is available from *Amana Tool* as well as the *Woodsmith Store*.

PLATFORM BED

The platform bed on page 22 requires minimal hardware. All it takes is one package of bed rail fasteners (#28597) from either *Rockler* or the *Woodsmith Store*.

You'll also need to get a flush trim plunge router bit to cut the mortises for the fasteners. The one I used came from *Amana Tool* (#45460-S) and was ½" wide with a cutting depth of ¼". You'll often find them listed as dado cleanout bits by the manufacturer.

INLAY MIRROR

One of the things that makes the mirror on page 32 so striking is the variety of woods and the patterns used for the inlays. You'll need to obtain these materials from a specialty supplier.

The flower marquetry medallions (#333M), tulipwood inlay strips (#397) for the frame pieces, and black inlay strips (#702) I used on the corner blocks all came from *Inlay Product World*. You'll have to place a minimum order of 10 strips for the tulipwood inlay and 20 strips of the black inlay. The information you need to order these is listed in the margin.

You'll also need some veneer to complete the project. Almost all veneer suppliers and woodworking stores will carry the straight-grain mahogany veneer needed for the corner blocks. The Carpathian elm burl veneer for the frame pieces came from *Constantines*. You can find ordering information in the margin at right as well.

The last thing you'll need is an adhesive for the veneer. For this, I used *Better Bond Cold Press Veneer Adhesive* that I got from *Veneer Supplies* listed at right.

TABLE SAW MITER SLEDS

A miter sled is a great addition to your table saw. The sleds shown in the article on page 14 are available from the manufacturers.

You'll find the *Dubby Sled* at *In-line Industries*. *Delta* makes the *Sliding Miter Jig* and it's available through *Delta* and their retailers. The *Deluxe Sled* is made by *Woodhaven*, see sources at right. Both the *Delta* and *Woodhaven* sleds are also available at the *Woodsmith Store*. W

Online Customer Service

Click on Subscriber Services at ***www.woodsmith.com***

- Access your account status
- Change your mailing or email address
- Pay your bill
- Renew your subscription
- Tell us if you've missed an issue
- Find out if your payment has been received

MAIL ORDER SOURCES

Similar project supplies may be ordered from the following companies:

Woodsmith Store
800-444-7002
woodsmithstore.com
Amana & Timberline Router Bits, Bed Rail Fasteners, Countersink Bits, Bin Pulls, Miter Saw Blades, Table Saw Miter Sleds

Rockler
800-279-4441
rockler.com
Bed Rail Fasteners, Bumpers, Bin Pulls, Threaded Inserts

H. Behlen
866-785-7781
hbehlen.com
Finishing Supplies, Lacquer, Rubbing Compound, Varnish

Inlay Product World
610-566-8660
inlays.com
Inlay Strips, Marquetry Medallions

Veneer Supplies
888-598-3633
veneersupplies.com
Veneer Adhesives

Amana Tool
800-445-0077
amanatool.com
Amana & Timberline Router Bits

Constantines
800-443-9667
constantines.com
Veneer

In-Line Industries
800-533-6709
in-lineindustries.com
Dubby Miter Sled

Woodhaven
800-344-6657
woodhaven.com
Deluxe Miter Sled

Lee Valley
800-871-8158
leevalley.com
Countersink Bits

WOODSMITH PROJECT SUPPLIES

We now feature hardware from **ROCKLER** in many of our new project kits. To order, please use our toll-free order line, see below. It's open Monday through Friday, from 8 AM to 5 PM Central Time. Before calling, please have your VISA, MasterCard, Discover, or American Express card ready.

If you would prefer to mail in an order, please call the toll-free phone number below for more information concerning shipping charges as well as any applicable sales tax.

Woodsmith *on the web*

- "Online Extras" - Plans, Patterns, & More
- Over 100 Woodworking Tips Online
- Visit Our Readers' Project Photo Gallery
- Project Plans You Can Download
- Catalog of Project Kits, Tools, Jigs, & Plans
- Forums for Woodworking, Tools, & Classifieds
- Links to Other Woodworking Sites
- Order *Woodsmith* & *ShopNotes* Back Issues

Call us at 1-800-444-7527 or online at www.woodsmith.com

4 steps to perfect Coped Joints

When it comes to getting perfect-looking joints with molding, nothing beats this traditional woodworking joint.

▲ In a coped joint, the end of one piece is cut to fit around the profile of the mating piece.

▲ The result is a tight-fitting joint that looks like it has been perfectly mitered.

No gaps. That's the goal whenever I'm fitting molding to a project. But this is often easier said than done, particularly when it comes to fitting molding in an inside corner. All it takes is for the corner to be slightly out of square to throw off the fit of a mitered joint. That's where a coped joint comes in.

A coped joint is one where the end of one piece of molding is cut (coped) to match the profile of the mating piece, see photo above and upper drawing at left. When carefully done, the pieces fit together so well that the jointline is nearly invisible, see lower drawing.

ADVANTAGES. You might be wondering why anyone would go to all the trouble of making a coped joint when a simple miter joint would do the job. Actually, there are a couple of reasons.

First, a coped joint will give you a good fit even if your project is a little out of square. With a miter joint, you have to do a lot of fussing and trimming if the corner you're fitting the molding to isn't exactly 90°. But that isn't the case with a coped joint.

The second major benefit is that if the molding pieces should happen to shrink over time, the gap between the two pieces of a coped joint will be a lot less noticeable than if you had used a miter joint.

WHEN TO USE. Coped joints are often used by carpenters when installing baseboard and crown molding. But you'll also occasionally find them on furniture projects. A coped joint can be used any place where you're applying molding to an inside corner.

Making a coped joint really isn't as complicated as it looks. There are actually only four steps. The trick is in learning to saw to a line accurately with a coping saw. But that's something that you'll pick up quickly with just a little practice.

1 Miter End

There are two halves to a coped joint. The first piece is simply cut to length, leaving the end square so that it butts right up to the corner of the room or project that you're working on, see drawing at right.

The second piece is the one that will be coped. But in order to be able to "see" the profile of the molding, you need to miter the end of the piece at 45° beforehand, as shown in the drawing. This establishes the profile that you'll follow with your coping saw. You can cut this miter on the table saw or on a miter saw.

One other thing. When you're measuring for the length of the coped section of molding, keep in mind that this piece will butt up against the first piece. So depending on the profile of the molding, it may not reach all the way into the corner of your project.

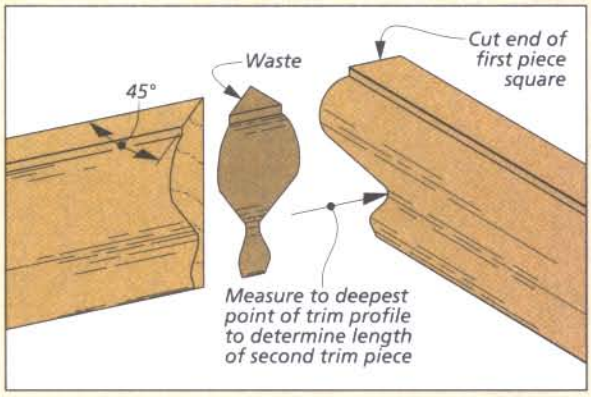

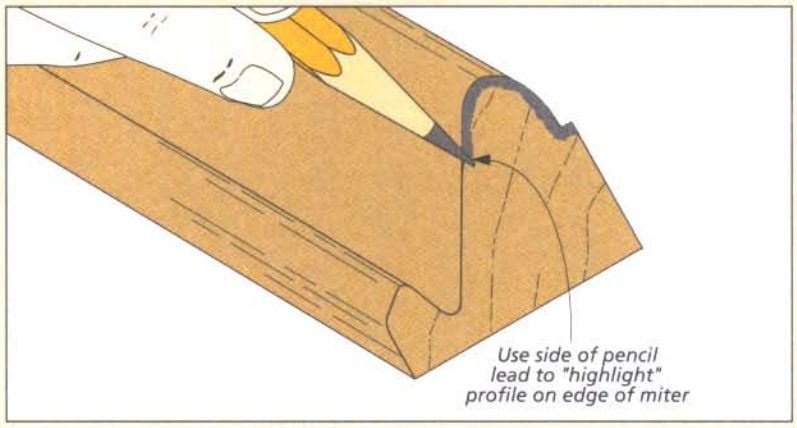

2 Highlight Profile

Even though mitering the end of the workpiece reveals the profile, it can still be difficult to see while you're trying to cut it. It's not easy to tell just where the edge of the miter cut meets the face of the molding.

So, to make the profile stand out more, I highlight the edge of the miter by shading it with a soft-lead pencil, see drawing at left. This gives you a much more visible line to follow.

3 Cope the Profile

With the profile clearly marked out, the next step is to cut along the layout line with a coping saw. There are just a few things to point out here. First, I like to mount the blade in my coping saw so the teeth point away from the handle. This allows you to cut on the downstroke while still working from above (see drawing). Not only do I find this more comfortable, it allows me to keep my eye on the layout line as I'm cutting.

Second, instead of starting at one end of the profile and trying to follow it all the way along, it's easier to cut the profile in sections. By coming in from different angles, you can cut into corners and tight curves that the saw wouldn't otherwise be able to navigate. Start by cutting out the larger curves first, then come back and cut the shoulders and smaller sections of the profile.

Finally, I hold the saw at a slight angle as I'm cutting the profile to create a back bevel on the coped piece. (You don't need much of a back bevel — three to five degrees is fine.) This way, you're certain the two pieces of molding will fit together tightly at the front of the joint, where it counts.

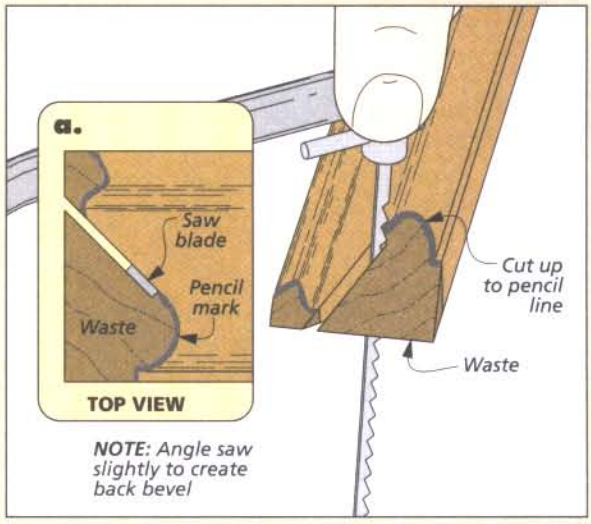

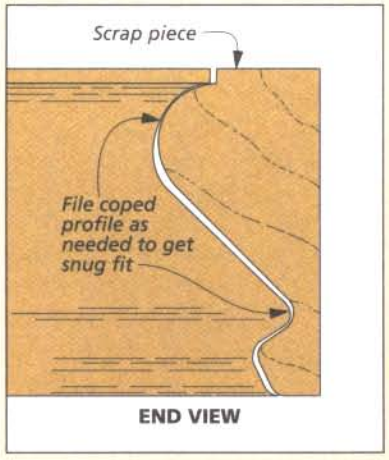

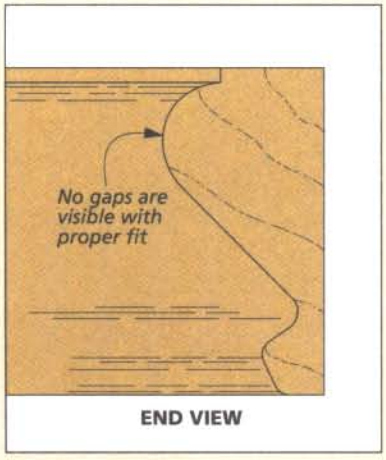

4 Check The Fit

The final step is to "fine tune" the fit. To do this, hold a scrap piece of molding against the coped piece to see where you need to make any adjustments, see first drawing at left.

Then using a file, gradually remove material from the profile a little at a time until the two pieces fit together tightly. A couple different sizes of half-round files come in handy here. After filing, you can lightly sand the profile to refine the fit even more.

looking inside
Final Details

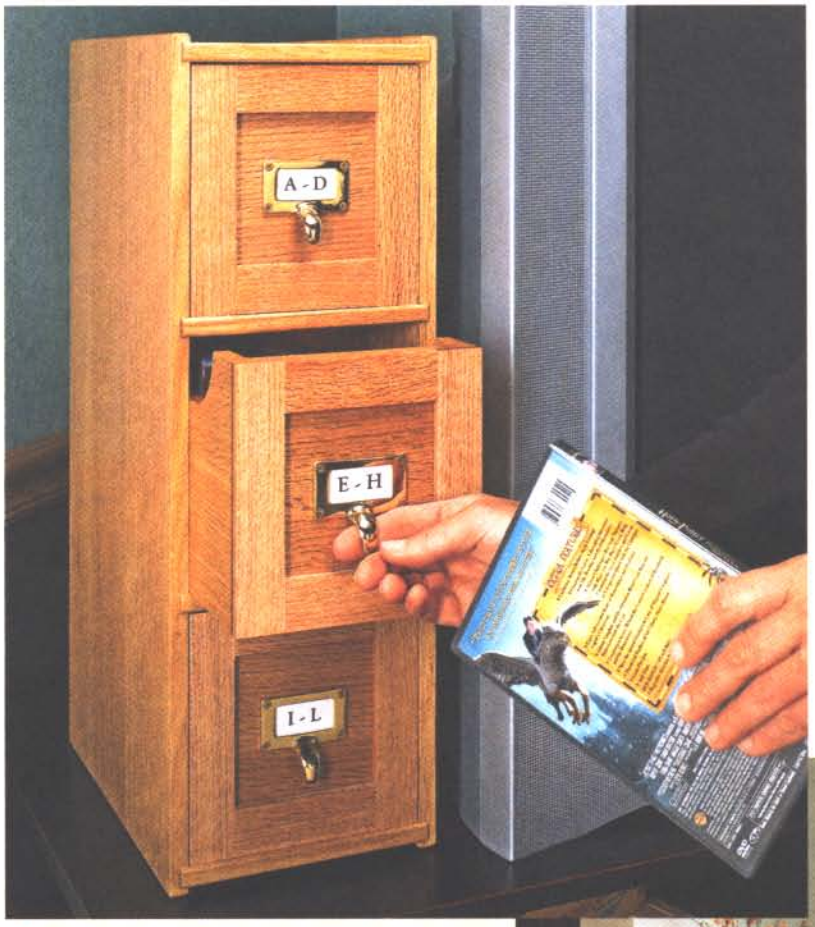

▲ *DVD Storage Case.* With basic dadoes and grooves for joinery, it won't take you long to build one or more of these storage cases to hold a whole library of movies. Complete plans begin on page 16.

▲ *Inlay Mirror Frame.* Learn how to add high-style details to a simple mirror frame (or almost any project) with inlay strips, marquetry medallions, and veneer. Step-by-step plans start on page 32.

Platform Bed. Strong, simple joinery makes for a sturdy bed that's easy to build. This bed looks great by itself or as part of the 5-piece suite you see here. Detailed instructions begin on page 22.